Floor Boxes

Unloaded Raised Access Floor Boxes

HUBBELL

Features

- Hinged cable egress port
- Pigtail terminates beneath raised floor
- Oversized opening provided with grommet for low-voltage

Ordering Information

Description	Cover Color	UPC	Catalog Number
4-Gang Shallow,	Gray	783585153018	AFB401GNT

Listings

UL File #E197203
CSA File #LR702145

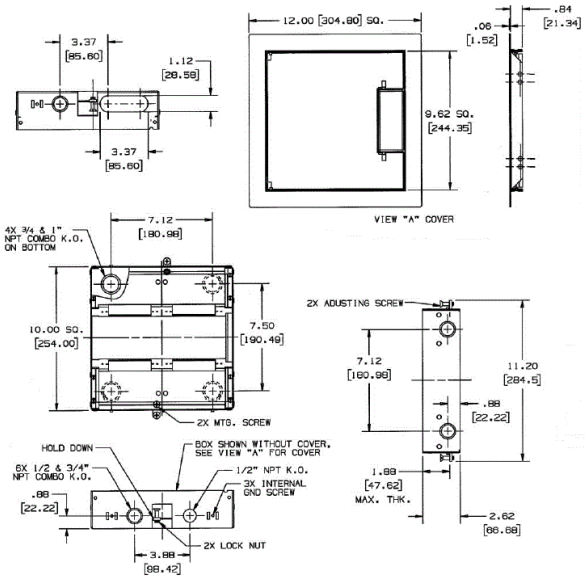

Specifications

Access Style	4-Gang Shallow
Material	Stamped Steel
Max. Floor Thickness	1.88" (47.8)
Cubic Capacity	25.3 cu. in. (414 cm3)
Floor Tile Cut-Out	10.38" x 10.38"

Online Resources

Customer Use Drawing
eCatalog
Installation Instructions

Dimensions in Inches (mm)

Hubbell Wiring Device-Kellems • Hubbell Incorporated (Delaware) • 40 Waterview Drive • Shelton, CT 06484
Phone (800) 288-6000 • Fax (800) 255-1031 • Specifications subject to change without notice.

HUBBELL® Wiring Device-Kellems