Straight Blade Devices

15A, 125V, 2 Pole, 3 Wire Grounding

Commercial Specification Grade Duplex Receptacles

15A125V AC
NEMA 5-15R
UL CSA
0.5 HP

Features

- Fully insulated design with 8-inch solid wire leads
- Smooth face
- Triple wipe contacts

Ordering Information

Description	Device Color	UPC Number	Catalog Number
Leaded, smooth face, self-grounding, 8" solid wire leads	Ivory	783585146034	**CR15IP1**

Listings

UL Listed to UL498 File No. E2186
Certified to CSA, C22.2, No. 42
NEMA® WD-6 Compliant

Specifications

Face	Nylon
Base	Nylon
Power Contacts	.030 in. (.8) Brass
Ground Contact	.031 in. (.8) Brass
Lead Wires	#12 AWG THHN solid copper wire
Mounting Strap	.040 in. (1) Galvanized steel
Automatic Self-grounding Staple	Stainless steel
Mounting Screws	Galvanized steel

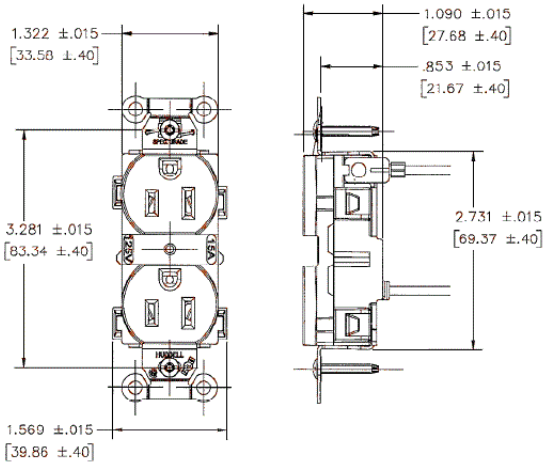

Performance

Electrical

Current Interrupting	Certified for current interrupting at full rated current
Dielectric Voltage	Withstands 2,000V minimum

Mechanical

Product Identification	Ratings are a permanent part of the device

Environmental

Flammability	UL 94V-2
Operating Temperatures	Maximum continuous 75°C; minimum -40°C (w/o impact)

Complementary Products

Wallplate or Weatherproof Cover	Duplex Opening

Online Resources

Customer Sales Drawings
eCatalog
Installation Instructions

Dimensions in Inches (mm)

Wiring Device-Kellems