Wallplates

Weatherproof Covers

Vertical, for FS/FD Box Mounting

Ordering Information

Description	Color	Catalog Number	UPC
For receptacles with face diameters of 1.36-1.39" (34.5-35.3), suitable for wet	Yellow	**HBL74CM23WO**	783585809403

Listings

UL Listed
CSA Certified

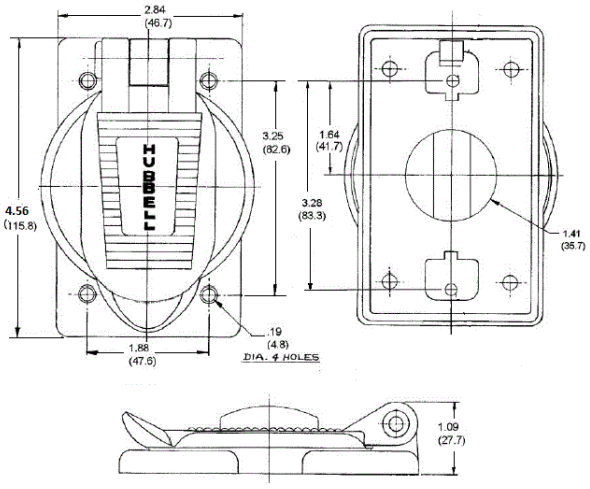

Specifications

Material	Thermoplastic
Gasket	Neoprene
Spring	Stainless steel
Hinge Pin	Stainless steel

Online Resources

Customer Use Drawing
eCatalog
Installation Instructions

Dimensions in Inches (mm)