# Floor Boxes

## Metallic Series

### Convention Center Utility Box

HUBBELL

### Features

- Custom Built Panels
- Hooks for tying onto rebar
- Separate enclosure to keep water away from electrical components

### Ordering Information

| Description | Material | UPC | Catalog Number |
|---|---|---|---|
| Stee, Convention | Galvanized Steel | 783585346021 | HBLSCCUBW |

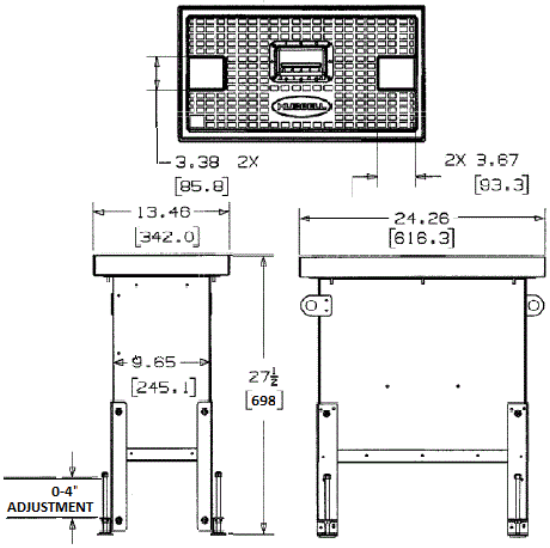


### Listings

UL Listed
CSA Certified

### Online Resources

Customer Use Drawing
eCatalog
Installation Instructions

Dimensions in Inches (mm)

Hubbell Wiring Device-Kellems • Hubbell Incorporated (Delaware) • 40 Waterview Drive • Shelton, CT 06484
Phone (800) 288-6000 • Fax (800) 255-1031 • Specifications subject to change without notice.

HUBBELL®
Wiring Device-Kellems