Switches and Lighting Controls

Illuminated Three Way, 15A 120/277V AC

Decorator Switch

Features

- Smooth, quiet rocker
- Self-grounding feature is standard
- Ultrasonically welded cover and base
- Residential Grade

Ordering Information

UPC	Catalog Number
883778119439	**RSD315ILLA**

Listings

CSA Certified
UL Listed E3896

Performance

Electrical

Dielectric voltage	Withstands 1,500V AC minimum for 1 minute
Endurance	30,000 cycles minimum
Max. working voltage	120V
Overload	1.5 times rating

Mechanical

Terminal accommodation	Back and side wire: #14 AWG min. - #12 AWG max. solid and stranded copper wire only; push wire: #14 AWG solid copper wire only

Environmental

Flammability	UL V-0
Operating Temperatures	Maximum continuous 60°C;minimum -20°C (without impact)

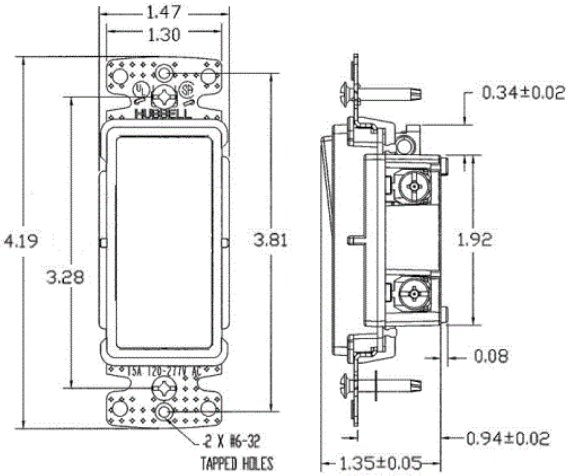

Online Resources

Customer Sales Drawings
eCatalog
Installation Instructions

Dimensions in Inches (mm)

Hubbell Wiring Device-Kellems • Hubbell Incorporated (Delaware) • 40 Waterview Drive • Shelton, CT 06484
Phone (800) 288-6000 • Fax (800) 255-1031 • Specifications subject to change without notice.

Wiring Device-Kellems