KIM LIGHTING®

LLF20 LED

Low Level Floodlight; Direct Lens, Asymmetric Right Downward

revised 3/30/21 • kl_llf20led_spec.pdf

Type:
Job:
Catalog number:

LLF20P35 / / /

Fixture | Electrical Module (See page 2) | Finish | Options (See page 3)

Approvals:

Date:
Page: 1 of 4

Specifications

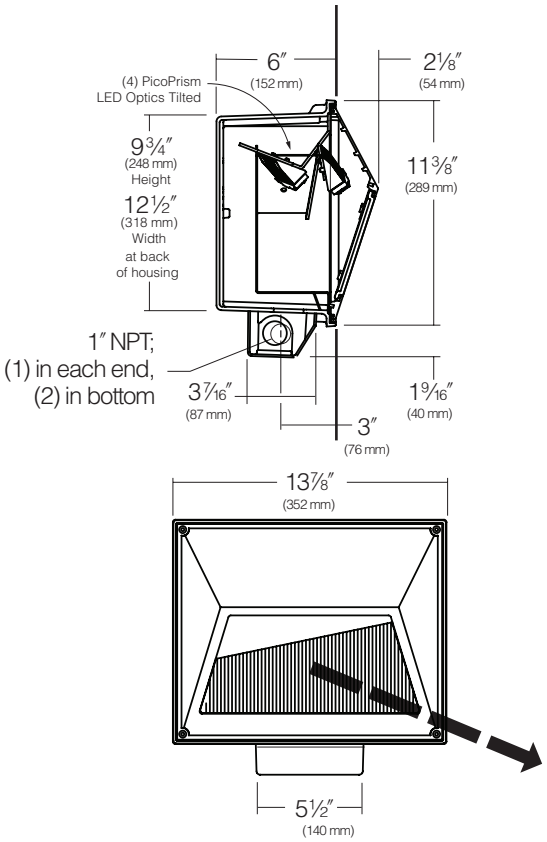

Arrows indicate
main thrust of light distribution,
in elevation.

Housing and Junction Box: Die-cast, low-copper (<0.6% Cu) aluminum to prevent corrosion when cast in concrete. Junction box shall have an internally removable cover, a volume of 25 cu in., and four 1″ NPT conduit taps. Two taps in the bottom and one in each end, all with removable plugs. Housing and junction box further protected for permanence by a clear anodize coating. Cover furnished to keep the housing clean until the electrical components are installed.

Pour Items: Aluminum housing and junction box only, less any electrical or optical components.

Finishing Items: Electrical module, reflector and door frame. Each set of finishing items shall be in one container, clearly marked for the fixture catalog number.

Door Frame: Die-cast, low-copper (<0.6% Cu) aluminum with a fine pebbled texture on the outer surface. Trapezoidal outer contour tilts the lens 18° from vertical. Door frame secured to housing by four captive stainless steel countersunk socket head screws. (LLF20) Tempered borosilicate glass, 3/16″ min. thickness, with a smooth outer surface flush with the door frame, and vertical inside flutes. Lens is fully sealed around the perimeter with a silicone gasket and is retained by zinc plated steel clips.

Gasketing: One-piece molded silicone between the door frame and housing. A neoprene gasket provided between the junction box and housing. The entire fixture is weather tight.

Electronic Module: All electrical components are UL and CSA recognized, mounted on a single plate and factory prewired with quick-disconnect plugs. Module includes a driver, thermal control device and surge protector. Electrical and optical modules attaches to housing with stainless steel hardware, accessible by opening the lens frame. Driver is rated for -40°F starting and has a 0-10V dimming interface with a dimming range of 10-100%. Note: Not compatible with current sourcing dimmers. Controls compatible via Gray and Purple dimming lead.

Optical Module: Each precision, replaceable PicoPrism is positioned to achieve directional control toward desired task. The entire optical system fastens to the housing as a one-piece module.

Finish: Each luminaire receives a fade and abrasion resistant, electrostatically applied, thermally cured, triglycidal isocyanurate (TGIC) polyester powder coat finish.

Listed To: UL 1598 Standard for Luminaires - UL 8750 Standard for Safety for Light Emitting Diode (LED) Equipment for use in Lighting Products and CSA C22.2#250.0 Luminaires.

Warranty: Kim Lighting warrants Low Level Floodlight LED products sold by Kim Lighting to be free from defects in material and workmanship for (i) a period of five (5) years for metal parts, (ii) a period of five (5 years for exterior housing paint finish(s), (iii) a period of five (5) years for LED Light Engines and, (iv) a period of five (5) years for LED power components from the date of sale of such goods to the buyer as specified in Kim Lighting shipment documents for each product.

Caution: Fixtures must be grounded in accordance with national, state and/or local electrical codes. Failure to do so may result in serious personal injury.

HUBBELL Lighting

KIM LIGHTING RESERVES THE RIGHT TO CHANGE SPECIFICATIONS WITHOUT NOTICE.

© 2021 KIM LIGHTING INC. • 17760 ROWLAND STREET, CITY OF INDUSTRY, CA 91748 • TEL: 626/968-5666 • FAX: 626/369-2695

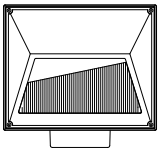

Standard Features

Fixture

Catalog number includes housing and junction box, optical system, and door frame with standard tempered glass lens.

Cat. No.: **LLF20P35***

Direct Lens, Asymmetric Right Downward Light Throw, Wall Mounted.

Arrows indicate main thrust of light distribution, in elevation.

*P35 = 350mA

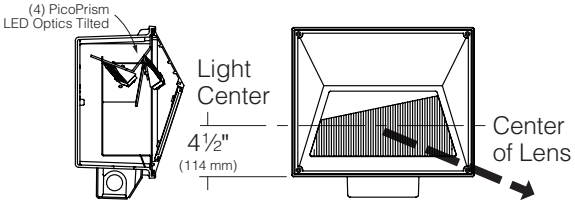

Electrical Module

Fixture	Source
☐ **16L2KUV**[1]	17W 16 LEDs, 580nm - Amber color temperature
☐ **16L3KUV**[1]	17W 16 LEDs, 3000K color temperature
☐ **16L4KUV**[1]	17W 16 LEDs, 4200K color temperature
☐ **16L5KUV**[1]	17W 16 LEDs, 5100K color temperature

[1]UV = Universal Voltage from 120 to 277V with a ± 10% tolerance.

Finish

TGIC powder coat

Cat. No.:	Color:	Cat. No.:	Color:
☐ **BLS**	Black Gloss Smooth	☐ **LGT**	Light Grey Matte Textured
☐ **BLT**	Black Matte Textured	☐ **PSS**	Platinum Silver Gloss Smooth
☐ **DBS**	Dark Bronze Gloss Smooth	☐ **VGT**	Verde Green Matte Textured
☐ **DBT**	Dark Bronze Matte Textured	☐ **WHS**	White Gloss Smooth
☐ **GTT**	Graphic Matte Textured	☐ **WHT**	White Matte Textured
☐ **LGS**	Light Grey Gloss Smooth	☐ **CC** [2]	Custom Color

[2]Custom colors subject to additional charges, minimum quantities and extended lead times. Consult representative. Custom color description: _____

0-10V Dimming Interface

Driver has a 0-10V dimming interface with a dimming range of 10-100%. Is compatible with most control systems. Note: Not compatible with current sourcing dimmers. Controls compatible via Gray and Purple dimming lead.

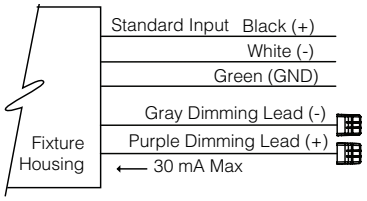

HUBBELL Lighting

Type:

Job:

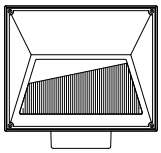

Optional Features

Polycarbonate Lens
Cat. No. ☐ **PL**
☐ **No Option**

Injection molded, identical appearance to standard tempered glass lens.

CAUTION: Use only when vandalism is anticipated to be high. Useful life is limited due to yellowing caused by UV from sunlight.

Fusing (internal only):
Cat. No. **(see chart at right)**
☐ **No Option**

High temperature fuse holders factory installed inside the fixture housing. Fuse is included.

Line Volts:	120V	208V	240V	277V
Cat. No.:	☐ **SF**	☐ **DF**	☐ **DF**	☐ **SF**

HUBBELL Lighting

© 2021 KIM LIGHTING INC. • 17760 ROWLAND STREET, CITY OF INDUSTRY, CA 91748 • TEL: 626/968-5666 • FAX: 626/369-2695

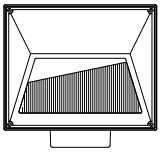

Lumen Data

Spectroradiometric			
	3000K Average	4200K Average	5100K Average
Correlated Color Temp. CCT (K)	2800K-3175K	3800K-4600K	4600K-5600K
Color Rendering Index (CRI)	≥75	≥70	≥65
Power Factor	>0.90	>0.90	>0.90

Projected Lumen Maintenance		
mA	50,000 hrs	100,000 hrs
350	0.97	0.95

Electrical Driver Current		
Maximum Watts	Volts	Amps
17	120	.14
	208	.08
	240	.07
	277	.06

Absolute Lumens	
CCT	LLF20
3000K	619
4200K	791
5100K	860

Lumens Per Watt	
CCT	LLF20
3000K	36.4
4200K	46.5
5100K	50.6

© 2021 KIM LIGHTING INC. • 17760 ROWLAND STREET, CITY OF INDUSTRY, CA 91748 • TEL: 626/968-5666 • FAX: 626/369-2695