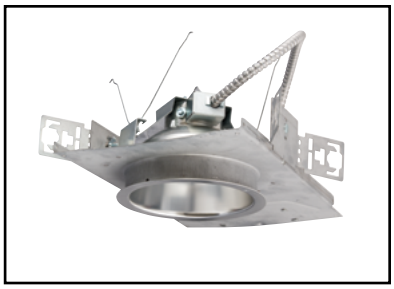

6" LED Downlight

LC6ML

2400 & 3000 Lumens
120V-277V, 347V
0-10V Dimming

DATE: TYPE:

FIRM NAME:

PROJECT:

LiteFrame®

WET LOCATION

BUY AMERICAN SOLUTIONS
See Certification Specifications

Ceiling Cutout: 6¼"
Maximum Ceiling Thickness 1¼"
For conversion to millimeters, multiply inches by 25.4
Not to Scale

APPLICATIONS:

LiteFrame Commercial LC6ML is a 6" commercial grade LED downlight with available outputs between 2400-3000 lumens. This is suitable to replace most CFL downlighting applications, while realizing substantial energy and maintenance savings. Rated for a minimum of 50,000 hours life (70% lumen maintenance) with ambient plenum temperatures up to 25°C. Free Air Flow around fixture is required for optimal life performance. This product is not recommended for use with 3rd party "FIREHAT" or insulation barriers.

HOUSING:

One-piece 22 gauge non-corrosive steel platform. Pre-wired J-box with snap-on cover for easy access. Snap-in connection from driver compartment allows easy installation of light engine/trim assembly and can be upgraded to accommodate technology improvements. Approved for 8 (4 in/4 out) No. 12 AWG conductors rated for 90°C through wiring.

REFLECTOR:

High purity aluminum, Alzak, iridescence suppressed, semi-diffuse reflector. Self-trim standard. Painted white self-trim (WT) available as option.

LED LIGHT ENGINE:

The LC6ML uses mid power Nichia LEDs, specifically mixed to provide a minimum of 80 CRI with 3 SDCM color consistency. The use of multiple mid power LEDs allows for optimal thermal management by effectively spreading the heat over a larger area and eliminating hot spots on the LEDs. A diffuse, yet highly transmissive lens obscures the view of the LEDs and creates a smooth, even look from below. The light engine is available in multiple Kelvin temperatures and the system is designed to provide optimal life and lumen maintenance (50,000 hours at 70% lumen maintenance). The reflector/light engine assembly is mechanically retained to the housing.

LED DRIVER:

The LC6ML utilizes a constant current LED driver that is capable of running both lumen outputs, resulting in a reduction of housing skus and simplified specification. The driver is UL8750, Class II compliant and universal 120V-277V.

DIMMING:

Comes standard with flicker-free 0-10V dimming to 10%. 0-10V to 1% dimming option is also available. See list of compatible dimmers on page (4). For the sizing of the control circuit, the dimming circuit may require up to 1.2mA of sink current.

INSTALLATION:

Light commercial bar hangers included (not with WWCP option). Universal adjustable mounting brackets also accept ½" EMT conduit or 1½" or ¾" lathing channel (by others) or Prescolite 24" bar hangers (B24 or B6). Wall wash orientation may be field adjusted in 90° increments to housing.

CERTIFICATIONS:

CSA certified to US and Canadian safety standards. Suitable for wet locations (EM, EMR & WW damp location). This product qualifies as a "designated country construction material" per FAR 52.225-11 Buy American-Construction. Materials under Trade Agreements effective 6/10/2020. See Buy American Solutions.

WARRANTY:

5 year warranty. See www.prescolite.com for details.

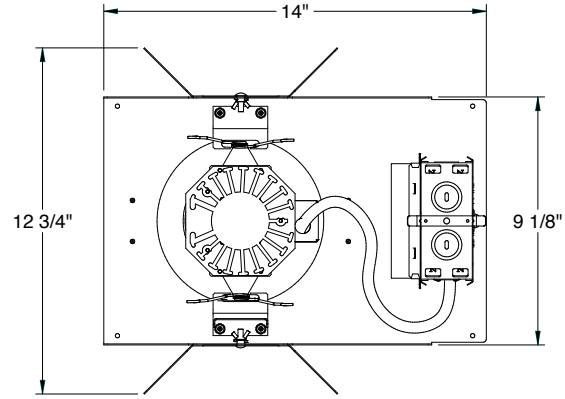

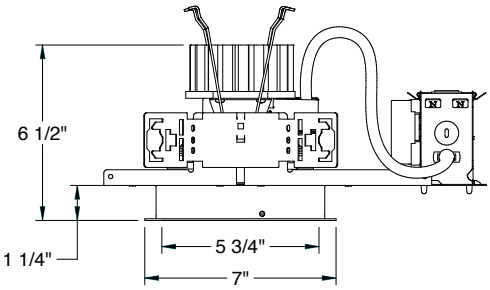

***See page 4 for LC6ML WWCP and EM line art**

Order housing, reflector, and accessories separately

CATALOG NUMBER: EXAMPLE: LC6MLDM1-6LCML30L35K9WH

HOUSING	DRIVER OPTIONS	VOLTAGE	HOUSING OPTION	-	TRIM APERTURE	OUTPUT	KELVIN	CRI	REF. FINISH/ COLOR OPTION	REFLECTOR OPTIONS	-	ACCESSORIES
❑ **LC6ML** Medium Lumen 0-10V Dimming to 10% 120V-277V	*Standard 0-10V 10% Dimming* ❑ **DM1** 0-10V 1% Dimming	*Standard 120V-277V* ❑ **347**[7,8] 347V	❑ **EM**[2,9] Integral Battery Pack ❑ **EMR**[2] Remote Battery Pack ❑ **CP**[4,5] Chicago Plenum ❑ **WWCP**[6] Wall Wash Chicago Plenum Housing		❑ **6LCML** Medium Lumen Clear Alzak Reflector	❑ **24L** 2400 Lumen ❑ **30L** 3000 Lumen	❑ **27K** 2700 Kelvin ❑ **30K** 3000 Kelvin ❑ **35K** 3500 Kelvin ❑ **40K** 4000 Kelvin ❑ **50K** 5000 Kelvin	❑ **8** 80+ CRI ❑ **9**[3] 90+ CRI	*Standard Semi-Diffuse Clear Alzak* ❑ **WH** Painted Matte White Reflector and Flange	❑ **WT** Painted White Flange only ❑ **WF** Wide Flange ❑ **WW**[2,7] Wall Wash ❑ **CP**[4,5] Chicago Plenum ❑ **EM**[2,9] Pre-punched reflector to accept integral test switch ❑ **IP65**[10] Flush Lens, IP65/66 rated ❑ **VR**[10] Vandal Resistant Flush Lens, IP65/66 rated		❑ **B24** Set of two(2) 24" bar hangers for T-bar ceilings ❑ **B6** Set of two (2) bar hangers for ceiling joist up to 24" centers ❑ **LiteGear**[1] Inverter, single phase central lighting, 125VA-250VA ❑ **LPS Series**[1] LitePower micro-inverter, 20VA-55VA

[1] See Central Inverter compatibility note and web links on page 4.
[2] Damp location only
[3] Not available in 40K or 50K
[4] CP must be selected on both housing and trim
[5] Not compatible with WW option
[6] WW must be selected on trim
[7] Not compatible with CP
[8] Not compatible with WWCP
[9] EM must be selected on both the housing and the trim, not compatible with WW trim
[10] IP65 and VR cannot be chosen together, not compatible with WT, WF, or EM

prescolite

In a continuing effort to offer the best product possible we reserve the right to change, without notice, specifications or materials that in our opinion will not alter the function of the product.
Web: **www.prescolite.com** • Tech Support: **(888) 777-4832**

PHOTOMETRIC DATA

LiteFrame - 6" LC6ML Downlight

DRIVER DATA	6LCML24Lxxx	6LCML30Lxxx
Input Voltage	120-277V	120-277V
Input Frequency	50/60 Hz	50/60 Hz
Input Current	0.271 (120v)	0.346 (120v)
	0.117 (277v)	0.150 (277v)
Input Power	32.5W	41.5W
Constant Current Output	675mA	675mA
Power Factor	≥0.90	≥0.90
THD	<20%	<20%
EMI Filtering	FCC 47CFR	FCC 47CFR
	Part 15, Class A	Part 15, Class A
Operating Temperature	-30ºC to +35ºC	-30ºC to +25ºC
Dimming	0-10V to 10%	0-10V to 10%

Over-voltage, over-current, short-circuit protected

Lumen Multiplier Table

Photometrics for the LC6ML are published below at a nominal 3000 Kelvin temperature. This table may be used to approximate the lumen values at different Kelvin temperatures. Power consumption would stay the same.

5000 Kelvin	1.14
4000 Kelvin	1.03
3500 Kelvin	1.00
3000 Kelvin	1.00
2700 Kelvin	0.91

LC6ML 6LCML24L30K8
LED Light Engine: 3000K, 80+ CRI
System Wattage: 32.5W
Fixture Delivered Lumens: 2375
Fixture Efficacy: 73.1
Spacing Criteria: 1.1

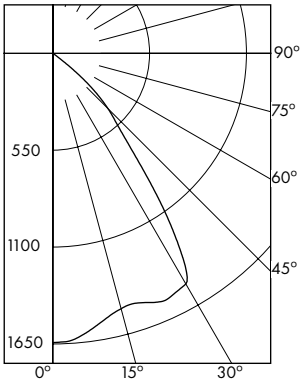

CANDELA DISTRIBUTION

DEG	CANDELA
0	1642
5	1621
15	1501
25	1540
35	1133
45	444
55	27
65	6
75	2
85	0
90	0

Test No. 9495
Tested at 25ºC Ambient in accordance to IESNA LM-79-2008

ZONAL LUMEN SUMMARY

ZONE	LUMENS	%LUMINAIRE
0-30	1286	54.2
0-40	1976	83.2
0-60	2367	99.6
0-90	2375	100.0
90-180	0	0.0
0-180	2375	100.0

LUMINANCE DATA IN CANDELA/SQ. METER

Angle in Vertical	AVERAGE
45°	37467
55°	2809
65°	847
75°	461
85°	0

COEFFICIENTS OF UTILIZATION Zonal Cavity Method

Room Cavity Ratio	% Effective Ceiling Cavity Reflectance																	
	80%				70%				50%				30%				10%	
	20% Effective Floor Cavity Reflectance																	
	% Wall Reflectance																	
	70	50	30	10	70	50	30	10	50	30	10	50	30	10	50	30	10
1	113	110	107	105	110	108	105	103	104	102	100	100	98	97	96	95	94
2	106	101	97	93	104	99	95	92	96	93	90	93	90	88	90	88	86
3	100	93	87	83	98	92	86	82	89	84	81	86	83	80	84	81	78
4	94	86	79	75	92	84	79	74	82	77	73	80	76	72	78	75	72
5	88	79	72	68	87	78	72	67	76	71	67	74	70	66	73	69	65
6	83	73	66	62	82	72	66	61	71	65	61	69	64	60	68	63	60
7	78	68	61	56	77	67	61	56	66	60	56	64	59	55	63	59	55
8	74	63	56	52	72	62	56	51	61	55	51	60	55	51	59	54	51
9	69	59	52	48	68	58	52	47	57	51	47	56	51	47	55	50	47
10	66	55	48	44	65	54	48	44	53	48	44	53	47	44	52	47	43

LC6ML 6LCML24L30K8 Test No. 9495

LC6ML 6LCML30L30K8
LED Light Engine: 3000K, 80+ CRI
System Wattage: 41.5W
Fixture Delivered Lumens: 2993
Fixture Efficacy: 72.1
Spacing Criteria: 1.1

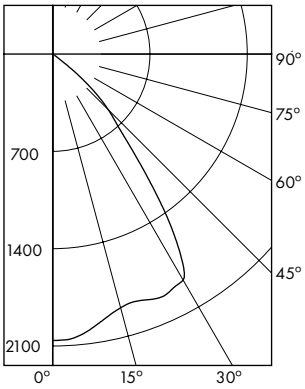

CANDELA DISTRIBUTION

DEG	CANDELA
0	2061
5	2040
15	1890
25	1914
35	1444
45	567
55	33
65	8
75	2
85	0
90	0

Test No. 9430
Tested at 25ºC Ambient in accordance to IESNA LM-79-2008

ZONAL LUMEN SUMMARY

ZONE	LUMENS	%LUMINAIRE
0-30	1609	53.7
0-40	2484	83.0
0-60	2983	99.7
0-90	2993	100.0
90-180	0	0.0
0-180	2993	100.0

LUMINANCE DATA IN CANDELA/SQ. METER

Angle in Vertical	AVERAGE
45°	47846
55°	3433
65°	1130
75°	461
85°	0

COEFFICIENTS OF UTILIZATION Zonal Cavity Method

Room Cavity Ratio	% Effective Ceiling Cavity Reflectance																	
	80%				70%				50%				30%				10%	
	20% Effective Floor Cavity Reflectance																	
	% Wall Reflectance																	
	70	50	30	10	70	50	30	10	50	30	10	50	30	10	50	30	10
1	113	110	107	105	110	108	105	103	104	102	100	100	98	97	96	95	94
2	106	101	96	93	104	99	95	92	96	93	90	93	90	88	90	88	86
3	100	93	87	83	98	91	86	82	89	84	81	86	83	80	84	81	78
4	94	86	79	75	92	84	79	74	82	77	73	80	76	72	78	75	72
5	88	79	72	68	87	78	72	67	76	71	67	74	70	66	73	69	65
6	83	73	66	61	82	72	66	61	71	65	61	69	64	60	68	63	60
7	78	68	61	56	77	67	61	56	66	60	56	64	59	55	63	59	55
8	74	63	56	51	72	62	56	51	61	55	51	60	55	51	59	54	51
9	69	59	52	47	68	58	52	47	57	51	47	56	51	47	55	50	47
10	66	55	48	44	64	54	48	44	53	48	44	52	47	43	52	47	43

LC6ML 6LCML30L30K8 Test No. 9430

prescolite

Web: **www.prescolite.com** • Tech Support: **(888) 777-4832**
701 Millennium Boulevard • Greenville, SC 29607 U.S.A. • Phone (864) 678-1000

Copyright ©2021 Prescolite, Inc., a division of Hubbell Lighting, Inc. All Rights Reserved

Specifications subject to change without notice. • Printed in U.S.A. • LFR-LED-043 • 12/01/21

HUBBELL Lighting

PHOTOMETRIC DATA

LiteFrame - 6" LC6ML Downlight

LC6ML 6LCML24L30K8 WW
LED Light Engine: 3000K, 80+ CRI
System Wattage: 32.4W
Fixture Delivered Lumens: 2331
Fixture Efficacy: 71.9

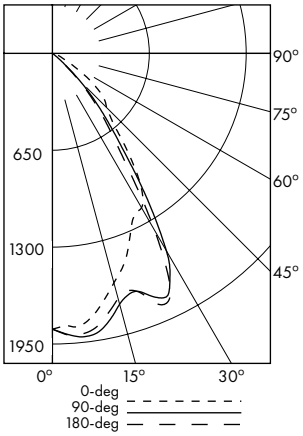

CANDELA DISTRIBUTION

DEG	0	90	180
0	1850	1850	1850
5	1842	1907	1894
15	1594	1742	1702
25	1261	1804	1837
35	994	936	771
45	514	261	223
55	290	9	8
65	72	3	3
75	12	2	2
85	1	0	0
90	0	0	0

LUMINANCE DATA IN CANDELA/SQ. METER

Angle in Vertical	0 DEG	90 DEG	180 DEG
45°	43374	22024	18818
55°	30169	936	832
65°	10166	424	424
75°	2767	461	461
85°	685	0	0

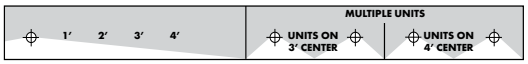

2.5′ DISTANCE FIXTURE MOUNTED OUT FROM WALLS
FOOTCANDLE DISTRIBUTION ON WALL SURFACE (Direct Only)

DISTANCE FROM CEILING IN FEET											
1	7	4	1	0	0	7	4	7	7	1	7
2	30	20	5	1	0	32	21	32	31	9	31
3	29	21	11	2	0	33	33	33	30	22	30
4	27	24	13	5	1	38	39	38	30	26	30
5	18	17	14	7	3	31	37	31	24	29	24
6	12	12	11	8	4	29	28	29	20	24	20
7	9	8	8	7	4	26	23	26	18	18	18
8	7	6	6	6	4	21	20	21	16	14	16
9	5	5	4	4	4	17	17	17	14	12	14

LC6ML 6LCML24L30K8 WW — Test No. 9496

Test No. 9496
Tested at 25ºC Ambient in accordance to IESNA LM-79-2008

LC6ML 6LCML30L30K8 WW
LED Light Engine: 3000K, 80+ CRI
System Wattage: 41.4W
Fixture Delivered Lumens: 2905
Fixture Efficacy: 70.2

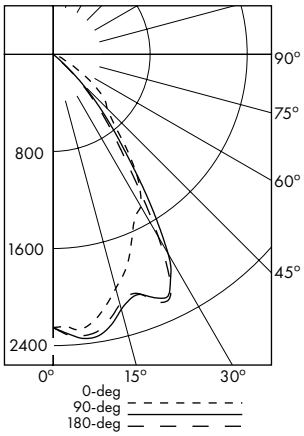

CANDELA DISTRIBUTION

DEG	0	90	180
0	2251	2251	2251
5	2278	2341	2329
15	1997	2175	2129
25	1565	2211	2239
35	1197	1194	1007
45	630	332	293
55	354	13	11
65	92	5	4
75	15	3	3
85	1	0	0
90	0	0	0

LUMINANCE DATA IN CANDELA/SQ. METER

Angle in Vertical	0 DEG	90 DEG	180 DEG
45°	53162	28016	24725
55°	36827	1352	1144
65°	12989	706	565
75°	3458	692	692
85°	685	0	0

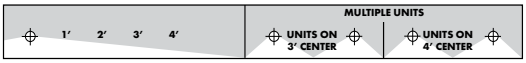

2.5′ DISTANCE FIXTURE MOUNTED OUT FROM WALLS
FOOTCANDLE DISTRIBUTION ON WALL SURFACE (Direct Only)

DISTANCE FROM CEILING IN FEET											
1	9	5	1	0	0	9	5	9	9	2	9
2	37	24	6	1	0	39	26	39	37	11	37
3	36	27	14	3	1	42	41	42	37	27	37
4	32	29	16	7	2	47	48	47	36	33	36
5	22	21	17	9	4	39	46	39	29	35	29
6	15	14	14	10	5	36	35	36	25	29	25
7	11	11	10	9	5	32	29	32	22	23	22
8	8	8	7	7	5	26	25	26	20	18	20
9	6	6	6	5	5	21	22	21	17	15	17

LC6ML 6LCML30L30K8 WW — Test No. 9432

Test No. 9432
Tested at 25ºC Ambient in accordance to IESNA LM-79-2008

Copyright ©2021 Prescolite, Inc., a division of Hubbell Lighting, Inc. All Rights Reserved

Specifications subject to change without notice. • Printed in U.S.A. • LFR-LED-043 • 12/01/21

Dimming Compatibility Table

Dimming Ballast	Manufacturer	Web Link
DM/DM1	Lutron DVTV	http://bit.ly/11jSvZg
DM/DM1	Leviton AWRMG-7xx, AWSMG-7xx, AWSMT-7xx	http://bit.ly/1BJn2R9

Central Inverters

For full fixture output in back-up mode, we recommend you visit www.dual-lite.com for your Central Lighting Inverter options. Please contact your local Hubbell representative for any assistance with proper sizing and loading of your inverter selection. Central lighting inverters must be ordered separately.

LiteGear: www.dual-lite.com/products/litegear_lg_series
LPS Series: www.dual-lite.com/products/lps

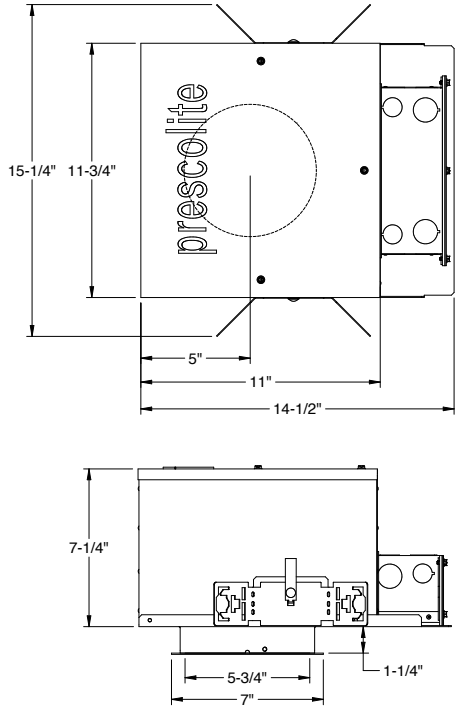

LC6ML WWCP

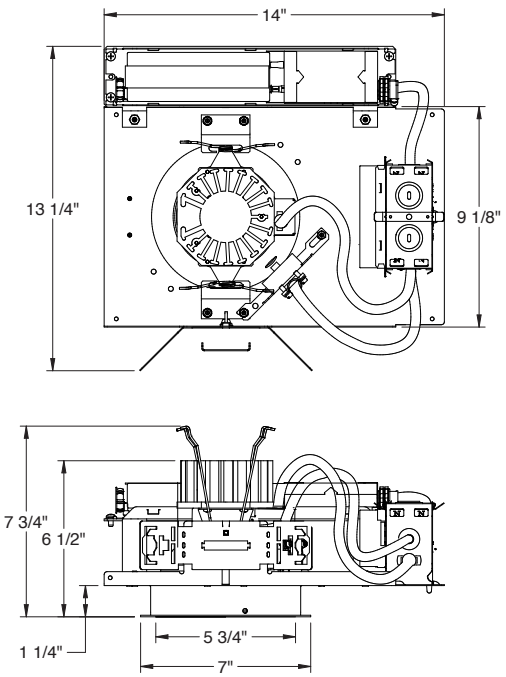

LC6ML EM

Copyright ©2021 Prescolite, Inc., a division of Hubbell Lighting, Inc. All Rights Reserved
Specifications subject to change without notice. • Printed in U.S.A. • LFR-LED-043 • 12/01/21