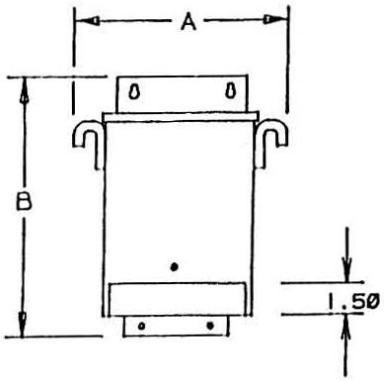


FRONT

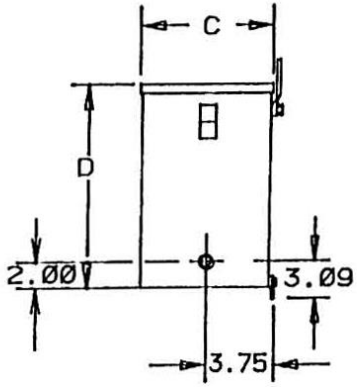


SIDE

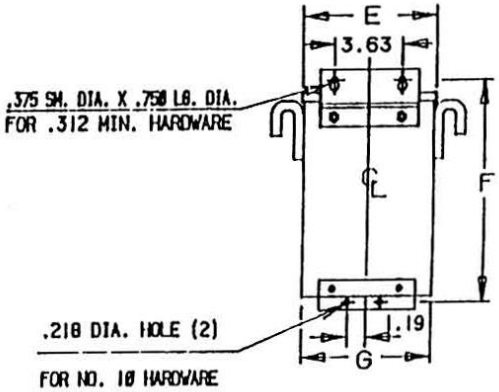


BACK

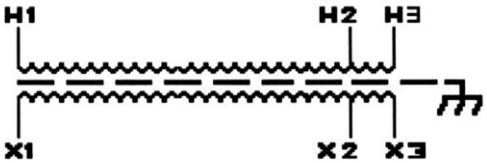


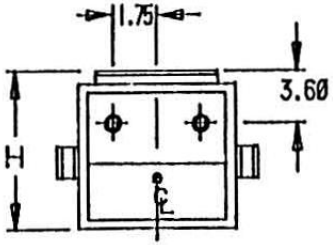


BOTTOM

| INPUT CONNECTIONS | | |
|---|---|---|
| VOLTS | INPUT LINES 1 | 2 |
| 277 | H1 | H2 |
| 480 | H1 | H3 |

| OUTPUT CONNECTIONS | | |
|---|---|---|
| VOLTS | OUTPUT LINES 1 | 2 |
| 208 | X1 | X2 |
| 277 | X1 | X3 |

| KVA | CATALOG NUMBER | VOLTAGE | | WIRING DIAGRAM | WEIGHT | PHASE | FREQ. |
|---|---|---|---|---|---|---|---|
| | | HIGH | LOW | | | | |
| 3.0 | GP12-3000-S | 277 / 480 | 208 / 277 | | 58 Lbs | 1 | 60 Hz |

TYPICAL PERFORMANCE DATA

| | |
|---|---|
| Winding Rise | 115°C |
| Insulation | 180°C |
| Sound Level | 45 dB |

| | |
|---|---|
| Regulation @ 100% PF | 2.7% |

| | |
|---|---|
| IMPEDANCE | 3.12% |

| | |
|---|---|
| Typical Efficiency | 94.19 % |
| No Load Losses | 103.8 W |
| Full Load Losses | 185.1 W |

| A | B | C | D | E | F | G | H | | |
|---|---|---|---|---|---|---|---|---|---|
| 10.31 | 12.50 | 6.65 | 10.19 | 7.81 | 11.50 | 7.68 | 7.13 | | |

Revisions

Acme Electric Corporation
Power Distribution Products Division
AN ACTUANT COMPANY

Type No.

| | | | | | | | | |
|---|---|---|---|---|---|---|---|---|
| | | | | | A | PRINTS TO | CONTROL 7 | GP12-3000-S |