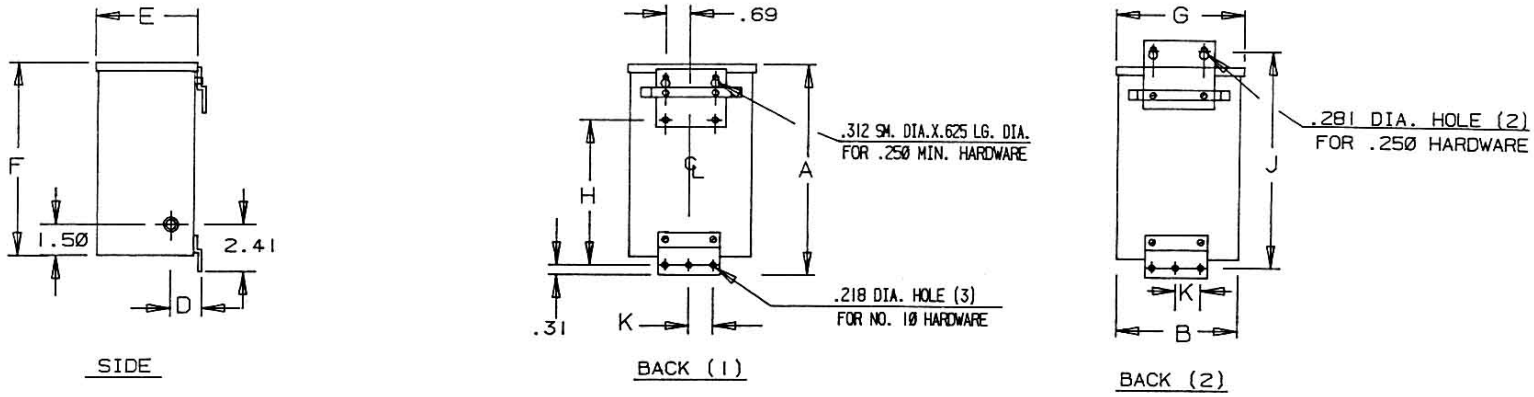


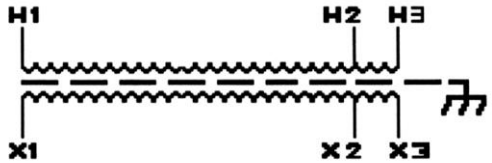


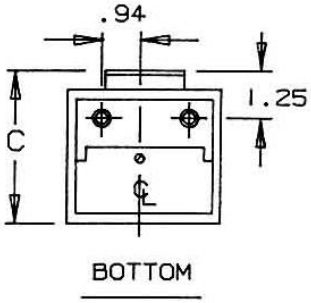


| INPUT CONNECTIONS | | |
|---|---|---|
| VOLTS | INPUT LINES 1 | 2 |
| 277 | H1 | H2 |
| 480 | H1 | H3 |

| OUTPUT CONNECTIONS | | |
|---|---|---|
| VOLTS | OUTPUT LINES 1 | 2 |
| 208 | X1 | X2 |
| 277 | X1 | X3 |

| KVA | CATALOG NUMBER | VOLTAGE | | WIRING DIAGRAM | WEIGHT | PHASE | FREQ. |
|---|---|---|---|---|---|---|---|
| | | HIGH | LOW | | | | |
| .500 | GP12-500-S | 277 / 480 | 208 / 277 | | Lbs | 1 | 60 Hz |

TYPICAL PERFORMANCE DATA

| | |
|---|---|
| Winding Rise | 115°C |
| Insulation | 180°C |
| Sound Level | 45 dB |

| | |
|---|---|
| Regulation @ 100% PF | 5.5% |

| | |
|---|---|
| IMPEDANCE | 5.47% |

| | |
|---|---|
| Typical Efficiency | 87.52 % |
| Full Load Losses | 71.27 W |
| No Load Losses | 43.91 W |

| A | B | C | D | E | F | G | H | J | K |
|---|---|---|---|---|---|---|---|---|---|
| 8.58 | 4.28 | 4.20 | 1.48 | 3.98 | 7.74 | 4.37 | 5.09 | 9.06 | 0.94 |

Revisions

Acme Electric®

Type No.

| | | | | | | | | |
|---|---|---|---|---|---|---|---|---|
| | | | | | A | PRINTS TO | CONTROL 7 | GP12-500-S |