DWG NO	SHT
HBLIMB	1
NOTES	

REVISION HISTORY			
REV	DESCRIPTION	DATE	APPROVED
A	RELEASE-NO ERN ISSUED	05/20/20	SRK

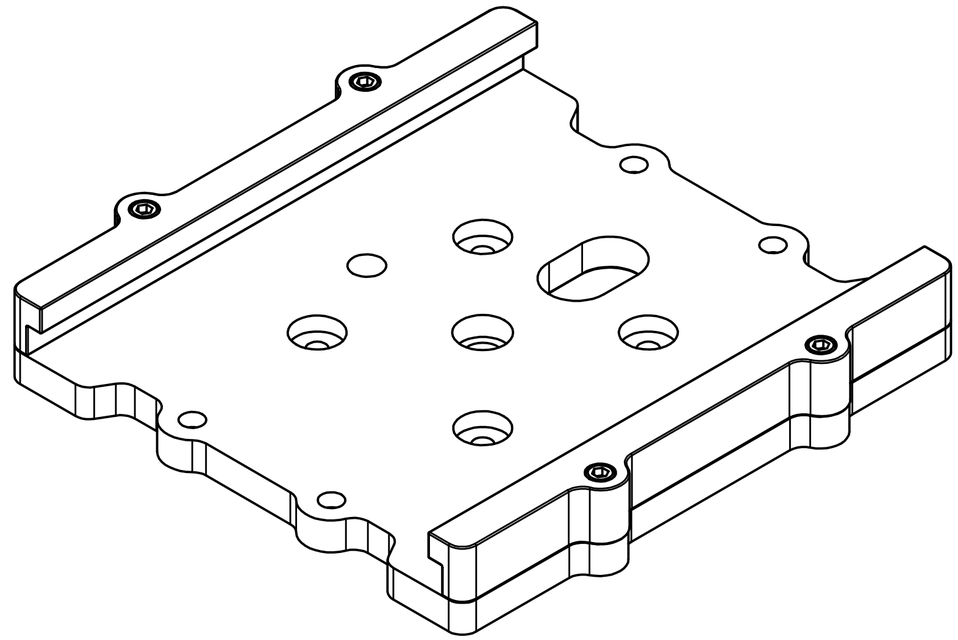

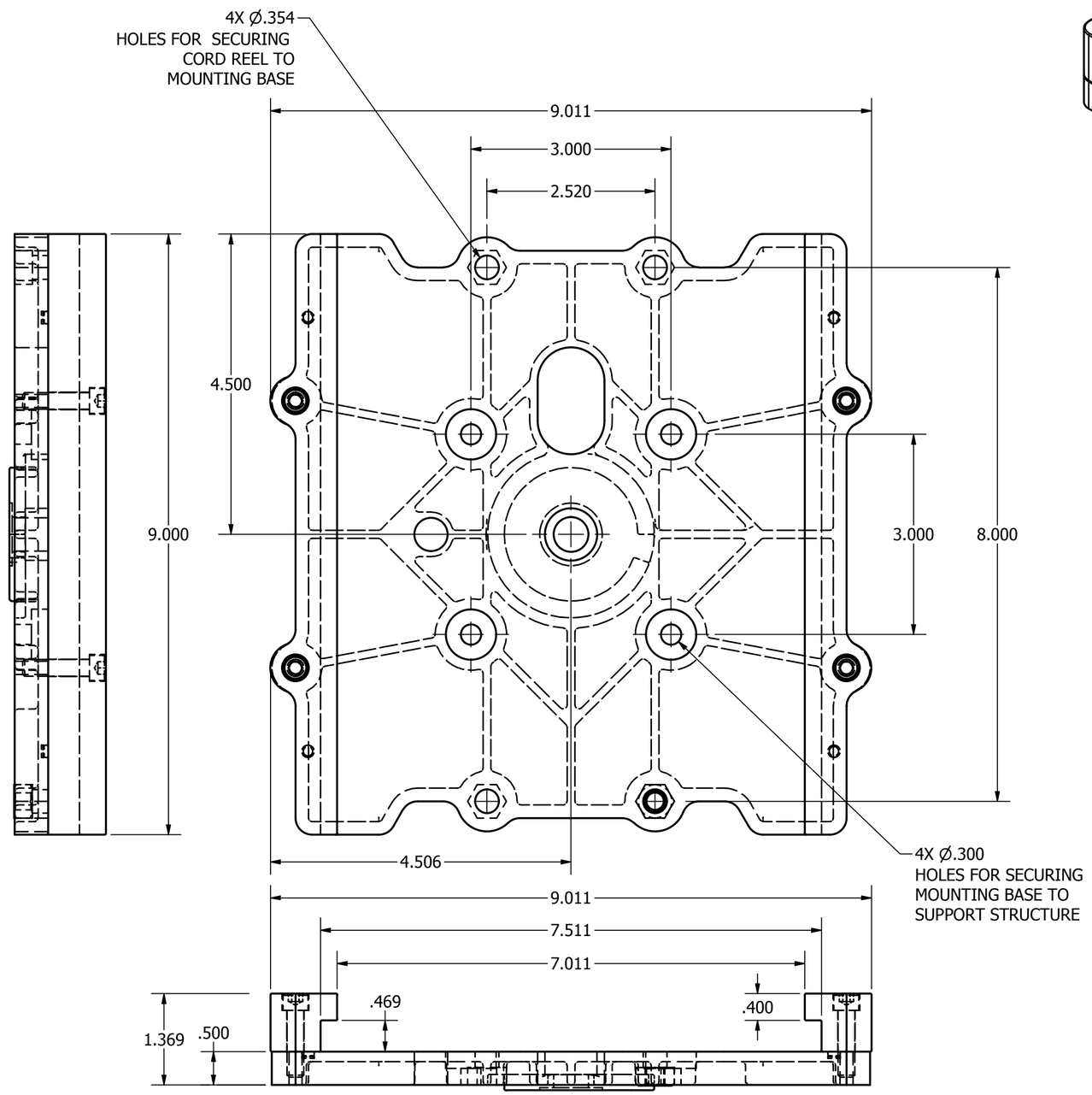

UNLESS OTHERWISE NOTED ALL DIMENSIONS ARE INCHES. TOLERANCES AS FOLLOWS:

DECIMAL	.X ± .1
DECIMAL	.XX ± .03
DECIMAL	.XXX ± .010
ANGLES	DEG-MIN ± 1°0'

THIS DRAWING AND ALL INFORMATION HEREON IS THE PROPERTY OF GLEASON REEL AND CONFORMS TO GLEASON REEL ENGINEERING POLICY. IT MUST NOT BE COPIED, REPRODUCED, OR SUBMITTED TO OTHERS WITHOUT WRITTEN AUTHORIZATION AND ALL REPRODUCTIONS ARE SUBJECT TO RETURN ON DEMAND.

APPLICATION	
NEXT ASSY	SIM TO

DRAWN	DATE
Microsoft	5/19/2020
APPROVED	DATE

GLEASON REEL CORP.
MAYVILLE, WISCONSIN

Inventor Drawing

MOUNTING BASE ASSEMBLY
MODEL ACA/WCA CORD REELS
DIMENSIONAL DRAWING

DWG NO: HBLIMB
REV: A

DO NOT SCALE DRAWING!

SHEET 1 OF 1