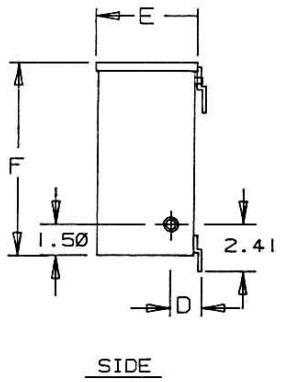


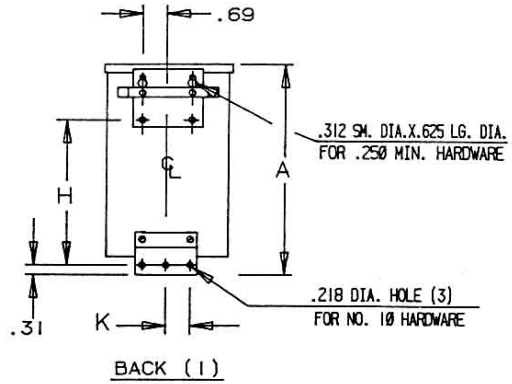


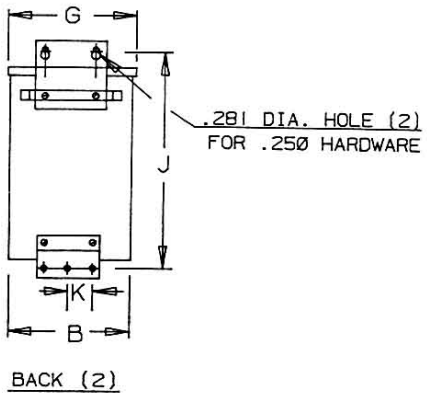


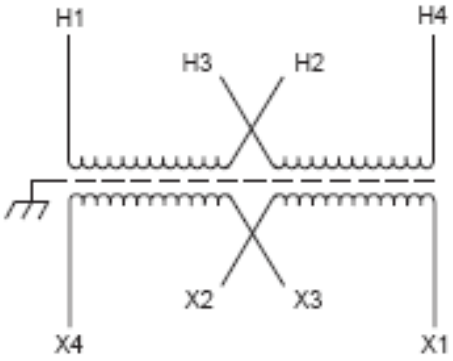


| Primary Volts | Connect Primary Lines To | Inter-Connect | Connect Secondary Lines To |
|---|---|---|---|
| 480 | H1-H4 | H2 to H3 | |
| 240 | H1-H3 & H2-H4 | | |
| **Secondary Volts** | | | |
| 240 | | X2 to X3 | X1-X4 |
| 120/240 | | X2 to X3 | X1-X2-X4 |
| 120 | | X1 to X3<br>X2 to X4 | X1-X4 |

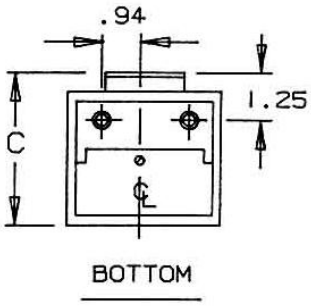


| KVA | CATALOG NUMBER | VOLTAGE | | Enclosure Rating | WEIGHT | PHASE | FREQ. |
|---|---|---|---|---|---|---|---|
| | | HIGH | LOW | | | | |
| 0.25 | **T-2-53007-SS** | 240x480 | 120/240 | NEMA 3R | 10 Lbs | 1ϕ | 50/60 Hz |

| | |
|---|---|
| Winding Rise | 115°C |
| Insulation | 180°C |
| Sound Level | 45 dB |

TYPICAL PERFORMANCE DATA

| | |
|---|---|
| Regulation @ 100% PF | |

| | |
|---|---|
| IMPEDANCE | |

| | |
|---|---|
| Typical Efficiency | |
| Full Load Losses | |
| No Load Losses | |

| A | B | C | D | E | F | G | H | J | K |
|---|---|---|---|---|---|---|---|---|---|
| 8.20 | 3.90 | 3.88 | 1.30 | 3.67 | 7.36 | 4.08 | 4.70 | 8.68 | .94 |

Revisions

ACME ELECTRIC

Type No.

| | | | | | | | |
|---|---|---|---|---|---|---|---|
| | | | | | A | PRINTS TO | CONTROL 7 |