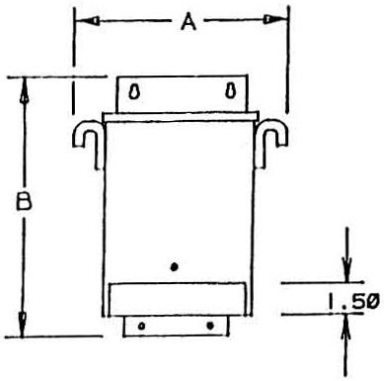

FRONT

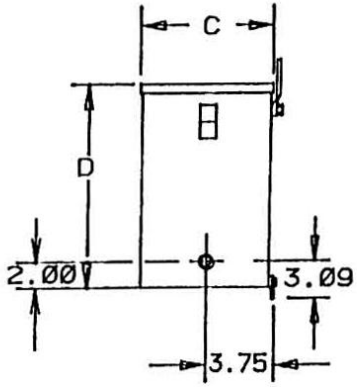

SIDE

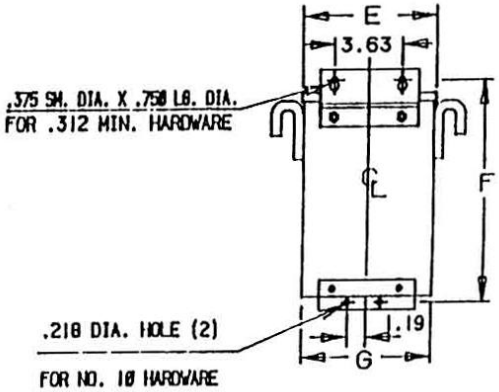

BACK

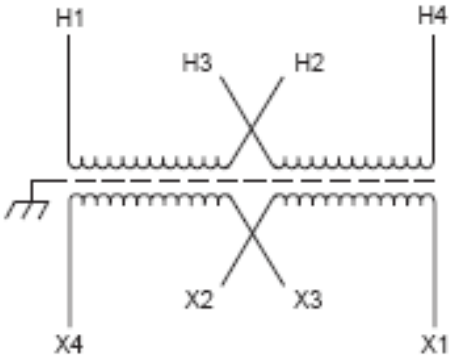

Primary Volts	Connect Primary Lines To	Inter-Connect	Connect Secondary Lines To
480	H1-H4	H2 to H3	
240	H1-H3 & H2-H4		
Secondary Volts			
240		X2 to X3	X1-X4
120/240		X2 to X3	X1-X2-X4
120		X1 to X3 X2 to X4	X1-X4

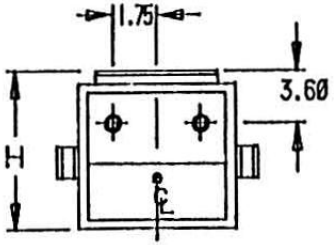

BOTTOM

KVA	CATALOG NUMBER	VOLTAGE		WIRING DIAGRAM	WEIGHT	PHASE	FREQ.
		HIGH	LOW				
3.0	**T-2-53013-S**	240 x 480	120/240		55 Lbs	1ϕ	60 Hz

TYPICAL PERFORMANCE DATA

Winding Rise	115°C
Insulation	180°C
Sound Level	40 dB

Standards:	UL/CSA

IMPEDANCE	4.38%

Typical Efficiency	94.7%
No Load Losses	44W
Full Load Losses	211W

Enclosure: NEMA-3R

A	B	C	D	E	F	G	H		
10.31	12.50	6.65	10.19	7.81	11.50	7.68	7.13		

Revisions

ACME ELECTRIC

File No.

UL – E79947

CSA - 7357

					A	PRINTS TO	**CONTROL 7**