M-13796 | 1

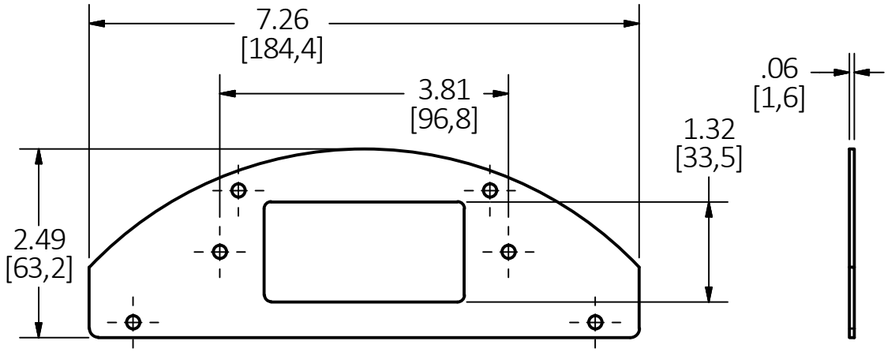


CATALOG NUMBER
S1R10PSPD
DECORATOR

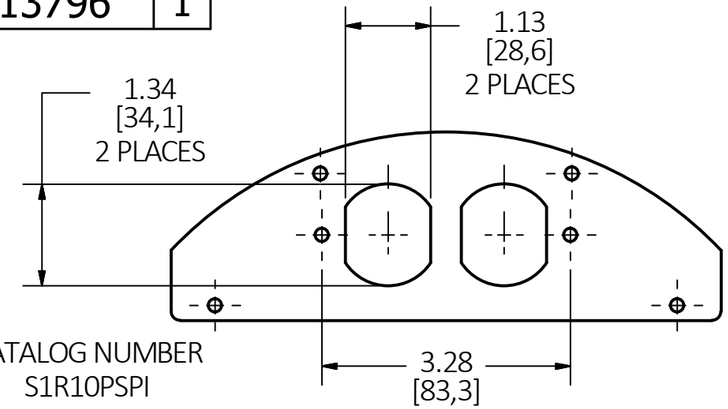


CATALOG NUMBER
S1R10PSPI
DUPLEX

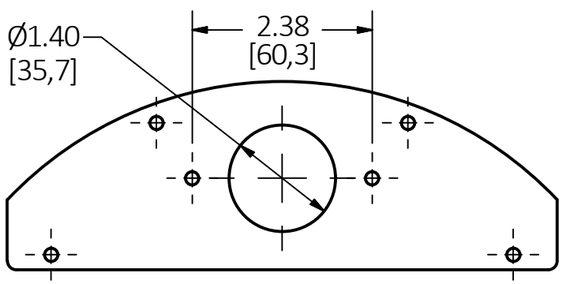


CATALOG NUMBER
S1R10PSPJ
1.40" OPENING

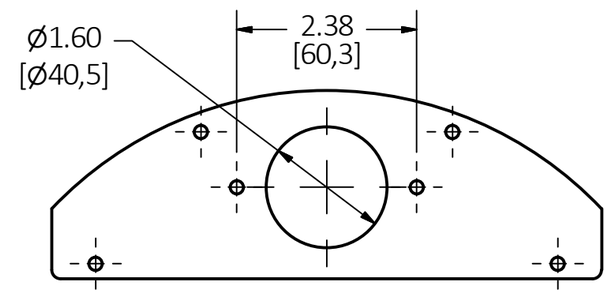


CATALOG NUMBER
S1R10PSPG
1.60" OPENING

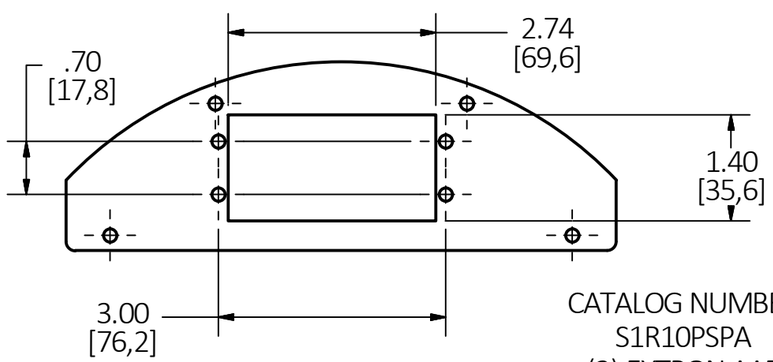


CATALOG NUMBER
S1R10PSPA
(2) EXTRON AAP

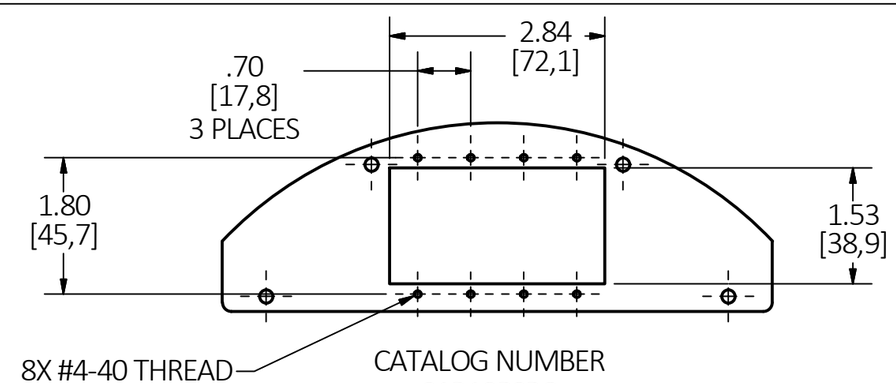


CATALOG NUMBER
S1R10PSPC
(4) EXTRON MAAP

LIST OF PARTS

| DESCRIPTION | MATERIAL | FINISH |
|---|---|---|
| COVER PLATE | STEEL | WHITE |
| MOUNTING SCREWS | STEEL | WHITE |

DIMENSION SHEET FOR CAT. NO.
SEE INDIVIDUAL CAT NOS.

| REV | DESCRIPTION | APP | DATE |
|---|---|---|---|
| 1 | RELEASED PER DCN23438 | AD | 11/15/17 |

THE DESIGN AND DIMENSIONS OF THE PRODUCT SHOWN ON THIS DRAWING ARE SUBJECT TO CHANGE WITHOUT NOTICE.

TITLE
COVER PLATES, FULL PERIMETER
10 INCH FRPT

WIRING DEVICE-KELLEMS
HUBBELL INCORPORATED
SHELTON, CT

TOLERANCES UNLESS OTHERWISE SPECIFIED
.XX = ± .01
.XXX= ± .005
ANGLE TOL. ±2°

| DR. BY | AD | SCALE | 1 / 2 |
|---|---|---|---|
| CHK. BY | SM | DATE | 11/3/17 |

B
M-13796
1

NOTES:
1. ALL DIMENSIONS ARE IN INCHES AND [MILLIMETERS].
2. ALL OVERALL PLATE DIMENSIONS ARE SAME AS PLATE S1R10PSPD.
3. ALL PLATES SHIPPED WITH (4) MOUNTING SCREWS, NOT SHOWN.

CAGE CODE 74545