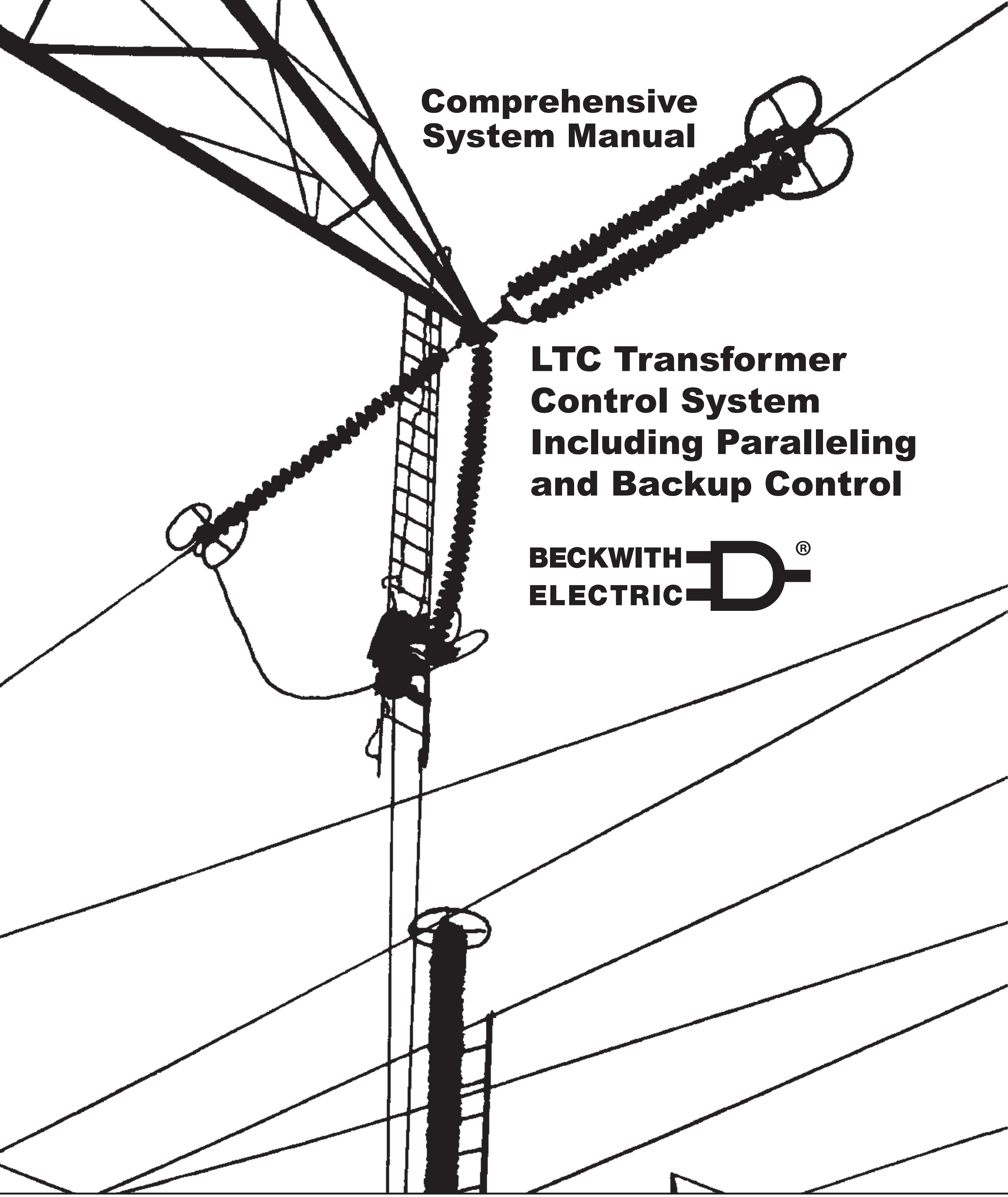

Comprehensive System Manual

LTC Transformer Control System Including Paralleling and Backup Control

BECKWITH ELECTRIC®

A proud member of the Hubbell family.

TRADEMARKS

All brand or product names referenced in this document may be trademarks or registered trademarks of their respective holders.

THIRD PARTY OPEN SOURCE CODE COPYRIGHTS

lwIP (lightweight IP) – lwIP is a widely used open-source TCP/IP stack designed for embedded systems.

Copyright © 2001, 2002. Author/Contributor: Adam Dunkels, *adam@sics.se*.

No Warranty. Software is provided "**AS IS**". No implied warranties available including merchantability & fitness for a particular purpose. Beckwith Electric is solely responsible for determining the appropriateness of using or redistributing the work and assumes any risks associated with its exercise of permissions under this License.

In no event shall the Author be liable for any direct, indirect, incidental, special, exemplary, or consequential damages (including, but not limited to, procurement of substitute goods or services; loss of use, data, or profits; or business interruption) however caused and on any theory of liability, whether in contract, strict liability, or tort (including negligence or otherwise) arising in any way out of the use of this software, even if advised of the possibility of such damage.

Racoon – Racoon is the Internet Key Exchange (IKE) library source code used in IPsec/IKE implementation.

Copyright © 2004, 2005, WIDE Project. All rights reserved.

Copyright © 2004. All rights reserved. Author/Contributor: Emmanuel Dreyfus.

Copyright © 2004, SuSE Linux AG, Nuremberg, Germany. All rights reserved. Author/Contributor: Michal Ludvig, *mludvig@suse.cz*.

Copyright © 1991, 1993. All rights reserved. Author/Contributor: The Regents of the University of California.

Copyright © 1998. Author/Contributor: Todd C. Miller, *Todd.Miller@courtesan.com*.

No Warranty. This Software is provided by the Project and contributors "**AS IS**" and any express or implied warranties, including, but not limited to, the implied warranties of merchantability and fitness for a particular purpose are disclaimed.

In no event shall the Contributor be liable for any direct, indirect, incidental, special, exemplary, or consequential damages (including, but not limited to, procurement of substitute goods or services; loss of use, data, or profits; or business interruption) however caused and on any theory of liability, whether in contract, strict liability, or tort (including negligence or otherwise) arising in any way out of the use of this software, even if advised of the possibility of such damage.

The content of this Instruction Book is provided for informational use only and is subject to change without notice. Beckwith Electric has approved only the English version of this document.

WARNING

DANGEROUS VOLTAGES, capable of causing death or serious injury, are present on the external terminals and inside the equipment. Use extreme caution and follow all safety rules when handling, testing or adjusting the equipment. However, these internal voltage levels are no greater than the voltages applied to the external terminals.

DANGER! HIGH VOLTAGE

– This sign warns that the area is connected to a dangerous high voltage, and you must never touch it.

PERSONNEL SAFETY PRECAUTIONS

The following general rules and other specific warnings throughout the manual must be followed during application, test or repair of this equipment. Failure to do so will violate standards for safety in the design, manufacture, and intended use of the product. Qualified personnel should be the only ones who operate and maintain this equipment. Beckwith Electric assumes no liability for the customer's failure to comply with these requirements.

– This sign means that you should refer to the corresponding section of the operation manual for important information before proceeding.

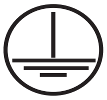

Always Ground the Equipment

To avoid possible shock hazard, the chassis must be connected to an electrical ground. When servicing equipment in a test area, the Protective Earth Terminal must be attached to a separate ground securely by use of a tool, since it is not grounded by external connectors.

Do NOT operate in an explosive environment

Do not operate this equipment in the presence of flammable or explosive gases or fumes. To do so would risk a possible fire or explosion.

Keep away from live circuits

Operating personnel must not remove the cover or expose the printed circuit board while power is applied. In no case may components be replaced with power applied. In some instances, dangerous voltages may exist even when power is disconnected. To avoid electrical shock, always disconnect power and discharge circuits before working on the unit.

Exercise care during installation, operation, & maintenance procedures

The equipment described in this manual contains voltages high enough to cause serious injury or death. Only qualified personnel should install, operate, test, and maintain this equipment. Be sure that all personnel safety procedures are carefully followed. Exercise due care when operating or servicing alone.

Do not modify equipment

Do not perform any unauthorized modifications on this instrument. Return of the unit to a Beckwith Electric repair facility is preferred. If authorized modifications are to be attempted, be sure to follow replacement procedures carefully to assure that safety features are maintained.

PRODUCT CAUTIONS

Before attempting any test, calibration, or maintenance procedure, personnel must be completely familiar with the particular circuitry of this unit, and have an adequate understanding of field effect devices. If a component is found to be defective, always follow replacement procedures carefully to that assure safety features are maintained. Always replace components with those of equal or better quality as shown in the Parts List of the Instruction Book.

Avoid static charge

This unit contains MOS circuitry, which can be damaged by improper test or rework procedures. Care should be taken to avoid static charge on work surfaces and service personnel.

Use caution when measuring resistances

Any attempt to measure resistances between points on the printed circuit board, unless otherwise noted in the Instruction Book, is likely to cause damage to the unit.

TABLE OF CONTENTS

LTC Transformer Control System Including Paralleling and Backup Control

1.0 Introduction

2.0 Peer to Peer Paralleling Communications and Power Backup

3.0 Firmware Update Cautions with Peer to Peer Paralleling

4.0 Delta VAr Peer-to-Peer Paralleling

4.0 Delta VAr Peer-to-Peer Paralleling (Cont.)

5.0 Master/Follower Peer-to-Peer Paralleling

6.0 Classic Paralleling

6.0 Classic Paralleling (Cont.)

7.0 Delta VAr2 Paralleling

Appendix A Adapter Panel Interconnections

Appendix A Adapter Panel Interconnections (Cont.)

Appendix B Paralleling Equipment Specifications

Appendix C Introduction to Circulating Current and Delta VAr1 Paralleling Methods

Appendix D Advanced Circulating Current Paralleling Method

Appendix D Advanced Circulating Current Paralleling Method (Cont.)

Appendix E Advanced Delta VAr Paralleling Methods

Appendix F Basic Considerations for the Application of LTC Transformers and Associated Controls

1.0 Introduction

This Comprehensive System Manual compiles LTC Transformer Control and Paralleling information from several Beckwith Electric Application Guides, Instruction Books and Specifications. This manual also contains the essential information needed to implement any one of several Paralleling methods offered in the M-2001 Series Tapchanger Control. In addition to providing an overview of each paralleling method and theory of operation, this guide details the necessary components, basic connection diagrams, and testing required for each method. This book, along with the M-2001 Series Instruction Book will guide the user through the Paralleling setup procedures without needing to reference other publications. The paralleling methods covered in this book include:

- Delta VAr Peer to Peer Paralleling (M-2001D)
- Master/Follower Peer to Peer Paralleling (M-2001D)
- Circulating Current Paralleling/Delta VAr1 Paralleling
- Delta VAr2 Paralleling

M-2001D Paralleling:

- **Circulating Current**
- **Delta VAr1**
- **Delta VAr2**
- **Delta VAr Peer to Peer**
- **Master-Follower Peer to Peer**

M-2001C Paralleling:

- **Circulating Current**
- **Delta VAr1**
- **Delta VAr2**

Recommended Components:

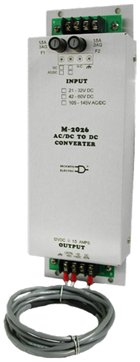

OR

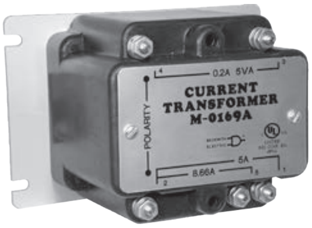

Required for Circulating Current and Delta VAr1 Paralleling Methods

Figure 1 LTC Transformer Control System and Paralleling Components

Refer to **Appendix B** for the following product Specification sheets for mechanical specs and additional product specific information:

- M-0169A Auxiliary Current Transformer
- M-0329B LTC Backup Control
- M-2026 and M-2027 Backup Power Supply
- M-0115A Parallel Balancing Module
- M-0127A/M-0170A AC Current Relay

Product Specifications can also be obtained from our website www.beckwithelectric.com.

LTC TRANSFORMER CONTROL CONNECTIONS

The diagrams in this Instruction book show block diagram schematics of an M-2001D Digital Tapchanger Control mounted in an adapter panel. The wires connecting to the Adapter Panel are labeled with their respective functions. The adapter panels were designed to make replacement using existing OEM controls as simple as possible. This often resulted in different adapter panel I/O terminal numbers to match that of the original control. Tables are included in the book that permit easy cross referencing of the function to the particular terminal block name and connection number used for any given function, or its corresponding connection to the M-2001D using the control's "P" numbers described below.

The "P" numbers in the M-2001D refer to the pin numbers of the two multiple pin sockets located on the bottom of the M-2001D. "P2" is the 8-pin by 3-row blue plastic male pin socket that contains all the basic connections to the M-2001D. "P3" is the 5-pin by 1-row green plastic male pin socket that contains the auxiliary connections (such as the breaker status inputs).

The numbers shown on all the auxiliary devices in the drawings are the terminal block screw numbers, and are clearly marked on each device.

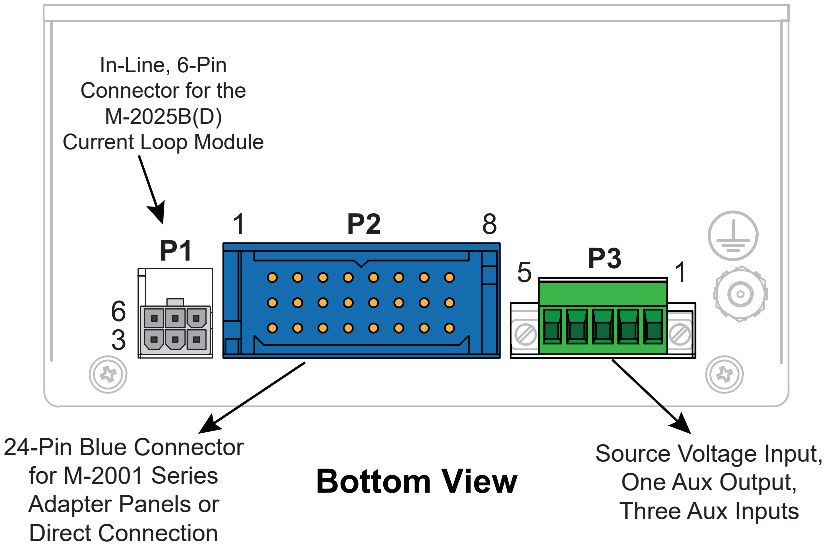

Figure 2 M-2001D Bottom View

M-0169A AUXILIARY CURRENT TRANSFORMER

▲ **CAUTION:** Load current must be reduced by an appropriate auxiliary current transformer to 0.2 A "full scale" before connecting to the M-2001 current inputs.

The Beckwith Electric M-0169A (5.0 A/8.66 A to 0.2 A) Auxiliary Current Transformer can be used to reduce Load Current to 0.2 A "Full Scale". The M-0169A is used in high burden circuits, such as those found in paralleling schemes. Outputs of the auxiliary CTs are protected against overvoltage. Additional information is contained in **Appendix F**, "Basic Considerations for the Application of LTC Transformers and Associated Controls".

M-0329B LTC BACKUP CONTROL

The M-0329B Backup Control offers reliable voltage protection from both improperly set and malfunctioning Tapchanger controls. The most common voltage error in setting tapchanger controls occurs when values of Line Drop Compensation are set in the tapchanger control that result in unexpectedly high voltage at the transformer due to higher than anticipated load currents.

Modern digital tapchanger controls typically offer Upper and Lower Voltage Limits in the form of Block Raise and Block Lower Setpoints, and can provide runback, as in the M-0329B. However, the M-0329B is a stand-alone, line voltage operated, analog device that keeps operating regardless of the condition of the main control's processor and/ or internal power supply.

The M-0329B has bandcenter and bandwidth settings, similar to the primary tapchanger control. In the majority of applications, the bandcenter should be set to the same numerical voltage value as the primary control. The bandwidth of the M-0329B should be set to at least twice the numerical value of the bandwidth setting of the primary control. The band edges of the M-0329B's bandwidth are the Upper and Lower Voltage Limits, (also known as Block Raise and Block Lower), beyond which, the M-0329B prohibits Raise and Lower commands from the primary control from energizing the tapchanger motor.

The M-0329B also has a "Deadband" setting. This is a voltage band of 1, 2, 3, or 4 Volts, and this value is selected by setting dip switches on the side of the M-0329B. The lower edge of the Deadband setting begins at the Upper Voltage Limit of the M-0329B. The upper edge of the Deadband is referred to as the "Voltage Runback Threshold". When the measured voltage exceeds this threshold due to load shedding or some other external event (the tapchanger is already blocked at this point), the M-0329B can issue its own Lower command. How quickly this occurs is determined by the time delay setting on the M-0329B, which is settable from 1 to 30 seconds. Once this Force Lower command is issued, the M-0329B will not cancel the command until the measured voltage is below the upper edge of the Deadband (Voltage Runback Threshold).

If, for some reason, the voltage remains above the Voltage Runback Threshold (an inoperative tapchanger), the M-0329B will time out for 180 seconds (3 minutes) and then close an Over-Voltage Alarm contact.

It may be helpful in setting the M-0329B to adjust the bandwidth setting and Deadband such that the Voltage Runback Threshold matches the maximum allowed system voltage, so that the over-voltage alarm corresponds with the actual maximum value.

It is also helpful to consider setting the M-0329B bandwidth to accommodate the maximum amount of anticipated Voltage Reduction (if used). To accommodate the maximum voltage reduction and the maximum allowable voltage, it is sometimes necessary to skew the bandcenter setting of the M-0329B to accommodate both. Consult the factory if you are unsure how to determine the value for a skewed bandcenter.

M-0329B Recommended Settings

To ensure proper operation, the following settings are recommended:

1. Set the bandcenter value on the M-0329B to the same numerical setting as the bandcenter on the primary tapchanger control.
2. Set the bandwidth value on the M-0329B to at least twice the numerical value of the bandwidth of the primary tapchanger control.
3. When Voltage Reduction settings are used in the primary tapchanger control, ensure the bandwidth setting of the M-0329B can fully accommodate the largest Voltage Reduction excursion.
4. If possible, set the M-0329B bandwidth such that its upper band edge is lower than the maximum allowable system voltage by the anticipated dead-band (run-back) value. This will allow the M-0329B to issue force lower commands upon reaching the maximum allowable system voltage.

M-0329B Installation and Testing

Refer to the full M-0329B Specification in **Appendix B** for Installation, Adjustment, and Test Procedures.

2.0 Peer to Peer Paralleling Communications and Power Backup

PEER TO PEER COMMUNICATIONS

Peer to Peer paralleling (Delta VAr and Master/Follower) uses Ethernet to communicate information between the paralleled M-2001Ds. In order for the M-2001Ds to communicate with each other, an Ethernet switch must be used. The Ethernet switch can be managed or unmanaged, and the user can take advantage of existing Ethernet communications infrastructure if it exists or select a new Ethernet switch. The Ethernet switch chosen should meet these minimum requirements:

- Supports GOOSE messaging IEC 618508-1 801-Q
- Supports Virtual Local Area Networks (VLAN and tagged VLANs used within IEC 61850 GOOSE Messaging IEEE 802.1D)
- Supports IEEE 802.3-10Base, IEEE 802.3u-100BaseTX, IEEE 802.3u-100BaseFX

All M-2001D Tapchanger Controls used in Peer to Peer paralleling must be equipped with an Ethernet port, but do not require the IEC 61850 library installation, as the necessary GOOSE messages are embedded in the Peer to Peer paralleling firmware. The M-2001D is offered with either RJ45 Copper 10/100 Base-T or Fiber Optic st 100 Base-FX Ethernet ports. Fiber optic medium is recommended for noise immunity and galvanic isolation in substation environments, especially when the communication path passes through the substation yard.

A PC may be connected to the Ethernet switch to allow communications to all M-2001Ds using TapTalk S-2001D Communications Software. The Peer to Peer paralleling communications may be observed in real time utilizing the appropriate Paralleling Configuration and Monitoring Tool Application contained in TapTalk. TapTalk may also be used for other interface tasks such as setting changes, data retrieval, observations of logging, etc.

Typical communication topologies that may be applied include:

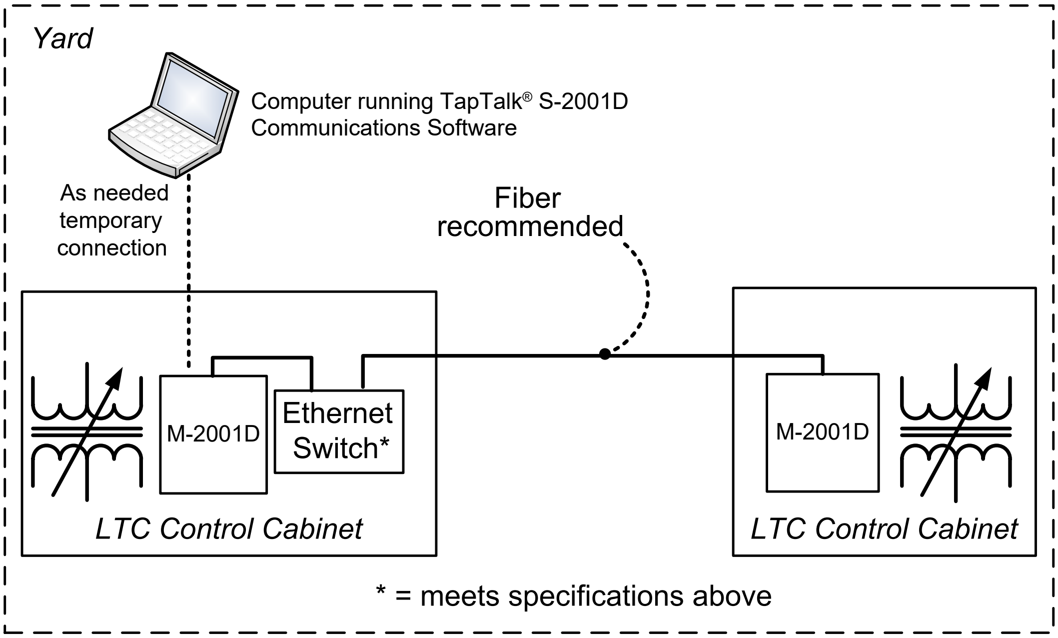

Figure 3 Isolated Network without Control House (no other traffic)

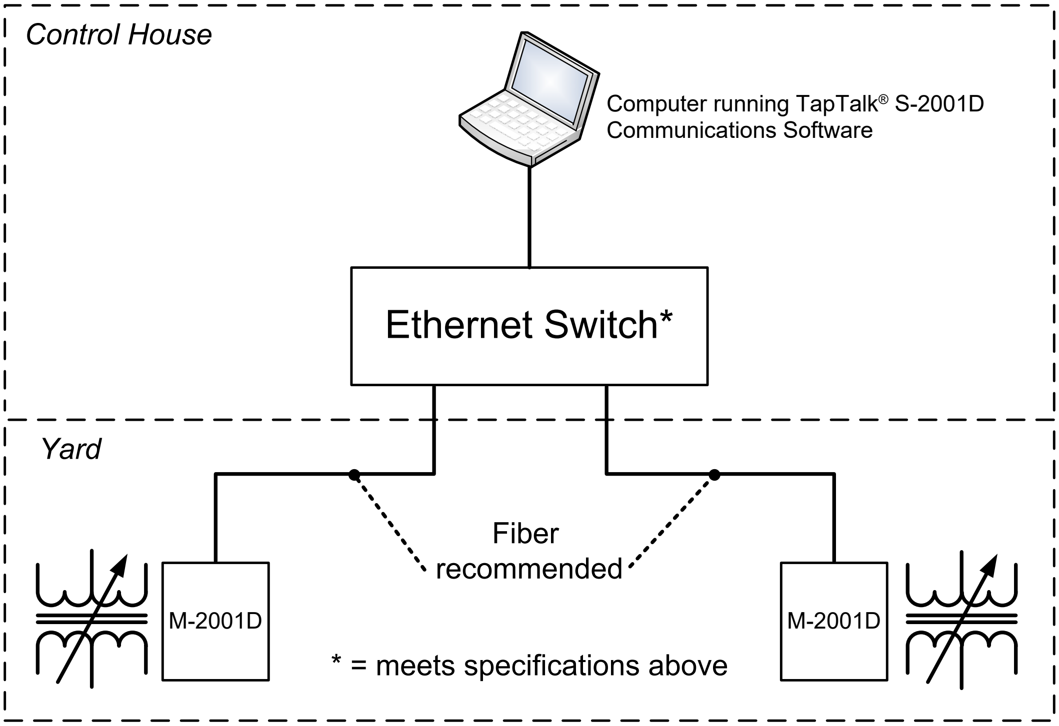

Figure 4 Isolated Network with Control House (no other traffic)

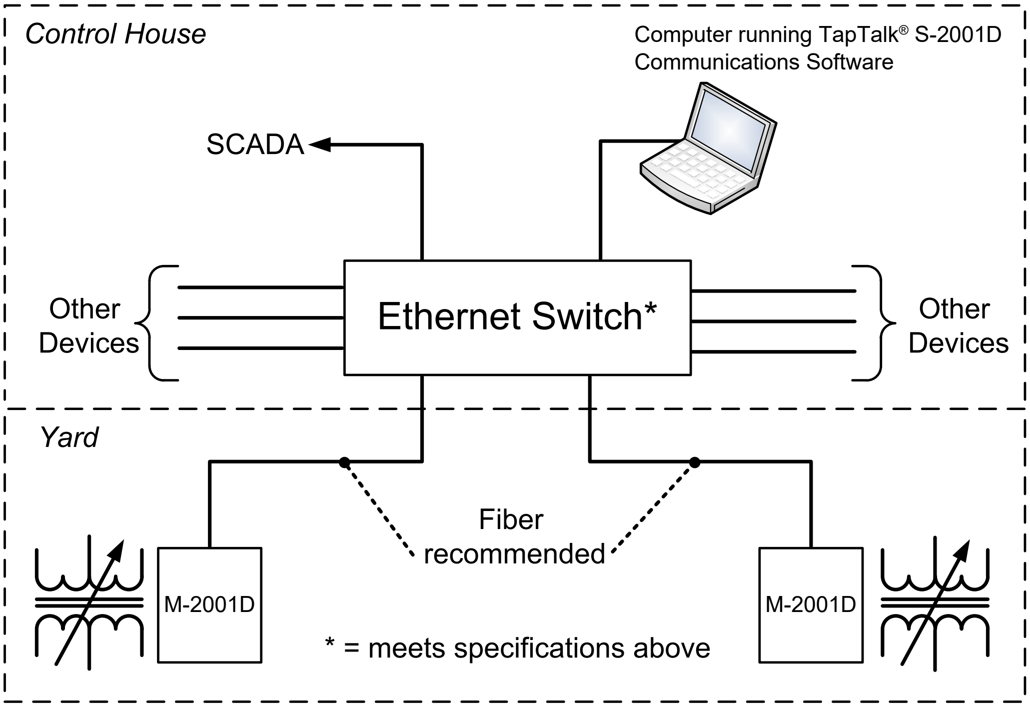

Figure 5 Network Includes Other Traffic

CONTROL POWER BACKUP

Control Power Backup Input

The optional Control Power Backup Input (two pin Molex connector on the top of control) sustains operation of the control in the event of a loss of AC input power to the control and serves as a backup of Fiber Optic communication loop-through. Raise and Lower commands are possible if the control's motor power remains energized. If the optional Control Power Backup Input is purchased, the following accessories are recommended.

M-2026 AC-DC Control Power Backup Supply

The M-2026 accepts AC and/or DC power input over a range of 21 to 32 Vdc, 42 to 60 Vdc, and 105 to 145 Vac/Vdc. The unit will supply a regulated +12 Vdc (±0.5 V) at up to a 1.5 A output. The unit includes a fused input, surge protection, and reverse polarity protection.

■ **NOTE:** It must be ordered in the input range needed.

M-2027 Control Power Backup Supply – AC Only

The M-2027 will accept an AC (105 to 140 Vac, 50/60 Hz) input and output +12 Vdc (Nominal). The M-2027 is capable of loads up to 1.0 Ampere. The unit incorporates a fused input and surge protection.

The M-2026 and M-2027 units are housed in a non-weathertight enclosure and equipped with screw terminal blocks for input and output connections.

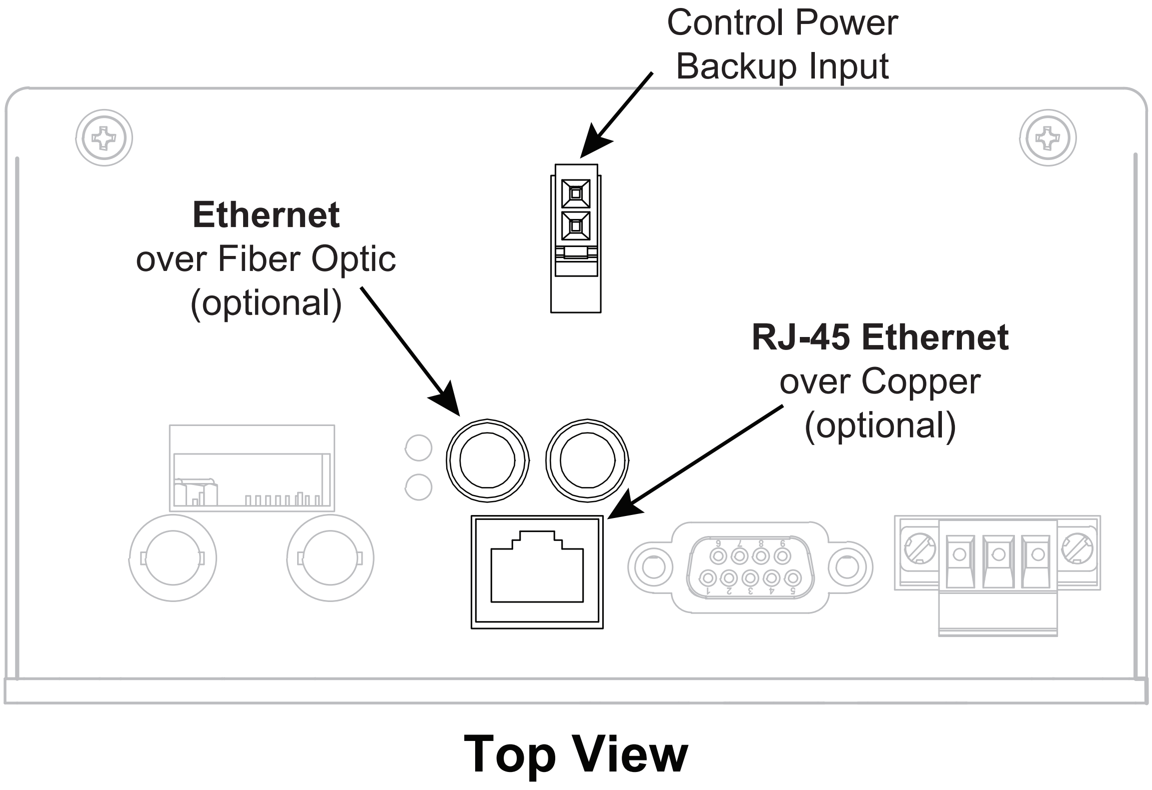

Figure 6 M-2001D Top View

3.0 Firmware Update Cautions with Peer to Peer Paralleling

> ▲ **CAUTION:** All M-2001D controls in the Delta VAr Peer to Peer Paralleling scheme must have the **same Firmware version** installed for proper operation.

As previously stated, the M-2001D Tapchanger Controls in a Peer to Peer Paralleling scheme do not require the purchase of the optional IEC 61850 protocol, as the necessary GOOSE messages are embedded in the Peer to Peer paralleling firmware. However, it is important to ensure that each control contains the latest CID file after any Firmware Update is performed.

Update CID File Message on the HMI

As an added precaution, when the control reboots following any Firmware Update, the HMI will display the applicable message based on whether the IEC 61850 protocol is purchased.

If the IEC 61850 protocol **IS** purchased, the following will be displayed:

```
MERGE PP & DWLD IEC
Any key to continue
```

The user can then update the CID file from the HMI **Communication/Memory Card** menu, or from TapTalk.

If the IEC 61850 protocol **IS NOT** purchased, the following will be displayed:

```
DWLD LATEST IEC CFG
Any key to continue
```

> ■ **NOTE:** If IEC 61850 is not purchased, a CID File cannot be updated from the HMI. The user must update the CID file using TapTalk. Refer to the following procedure.

TapTalk Utility/Update DVAr Peer to Peer after Firmware Update (without IEC 61850)

When the DVAr Peer to Peer Paralleling option is purchased without the IEC 61850 protocol, the CID file cannot be updated from the HMI/Memory Card menu. The file must be updated using TapTalk. The TapTalk **Utility/Update DVAr Peer to Peer** menu selection allows the user to update the GOOSE messaging CID file. This is **required** after a firmware update that makes any changes to the GOOSE message structure. This feature is available in firmware versions V02.04.12 and later.

Update DVAr Peer to Peer/Send

1. Select **Utility/Update DVAr Peer to Peer/Send**. TapTalk will prompt for a Level 2 Access Code, or User Name/Password. Enter a valid code, and select **OK**.
2. TapTalk will display the File Open screen with a default file extension of (*.cid).
3. Select the Configuration file to be sent, then select **Open**. TapTalk will display a Transferring status screen while the Configuration file is sent.
4. When the file has been successfully sent to the control, TapTalk will display a confirmation screen.

Update DVAr Peer to Peer/Receive

1. Select **Utility/Update DVAr Peer to Peer/Receive**. TapTalk will prompt for a Level 2 Access Code, or User Name/Password. Enter a valid code, and select **OK**.
2. TapTalk will display an "Access Granted" confirmation screen. Select **OK**.
3. TapTalk will display the Save As screen with a default file extension of (*.cid).
4. Navigate to the location for the saved file and enter the desired File Name, then select **Save**. TapTalk will display a Transferring status screen while the Configuration file is downloaded.
5. When the file has been successfully retrieved from the control, TapTalk will display a confirmation screen.

4.0 Delta VAr Peer-to-Peer Paralleling

The latest version of Delta VAr paralleling is the Peer-to-Peer version, (available only in the M-2001D control), which reduces inter-device wiring to primarily an Ethernet connection. To perform two-transformer paralleling as shown in Figure 7, the control employs auxiliary breaker status contacts on the transformers' load breakers and the tie breaker between the two transformers. To perform three-transformer paralleling as shown in Figure 8, the control employs auxiliary breaker status contacts on the transformers' load breakers and the tie breakers that may be on either side of a transformer.

Using breaker auxiliary contacts allows the controls to automatically adjust for changes in the system topology for single bus, ring bus, and double bus configurations. As shown in Figure 7 and Figure 8, the Ethernet connection requires that all paralleled units must have connections to a common LAN Switch. Correction factors are provided for paralleling sensitivity, maximum allowable VAr current flow, and differences in CT ratios. By monitoring breaker status, it will be possible to determine paralleling status for each transformer, and to automatically adjust for Line Drop Compensation settings if required.

▲ **CAUTION:** All M-2001D controls in the Delta VAr Peer to Peer Paralleling scheme must have the **same Firmware version** installed for proper operation.

Advantages:

1. Minimizes VAr circulating current between paralleled transformers.
2. Properly adjusts LDC in Parallel and Independent Modes.
3. Able to parallel transformers with different MVA and impedance ratings without custom ratio correcting current transformers.
4. Allows transformers to be sourced driven from separate high side voltages.
5. Eliminates paralleling bias errors by disregarding in-phase current components caused by transformer mismatches.
6. Tap position knowledge is not required by the control for operation.
7. Replaces Current Loop Wiring between controls with simple communications link.
8. Does not require M-0115A and M-0127A external paralleling devices.

Limitations:

None

DELTA VAR PEER TO PEER PARALLELING APPLICATION

A minimum of two controls are required for the Delta VAr Peer to Peer Paralleling scheme to function. The Delta VAr Peer to Peer Paralleling scheme can accommodate up to sixteen controls (including the Initiator Control which has the highest assigned numerical Paralleling Address). The Non-Initiator controls which have a lower Paralleling Address are configured first and then the Initiator control which starts the timing of the messaging.

The Delta VAr Peer to Peer Paralleling method utilizes the difference in VArs between the VAr contribution of an individual transformer and the average number of VArs (the sum of VArs in the paralleled transformers, divided by the number of transformers paralleled) produced in a parallel configuration. The difference in VArs is then converted to an equivalent bias voltage. This bias voltage is utilized to proportionally increase or decrease the control center band of the control based on the VAr deficiency or excess.

The Delta VAr Peer to Peer Paralleling method employs the GOOSE messaging element of the IEC 61850 protocol to provide peer to peer communications. The paralleling configuration consists of one Initiator (INI) control that holds the highest network address and up to 15 Non-Initiator (NINI) controls on the same network. All of the controls perform their own calculations based on the information being passed between the controls using the peer to peer communications. Once a control has been determined to be the Initiator, it starts (initiates) the parallel calculations in the network (or sub-network) of Non-Initiator controls.

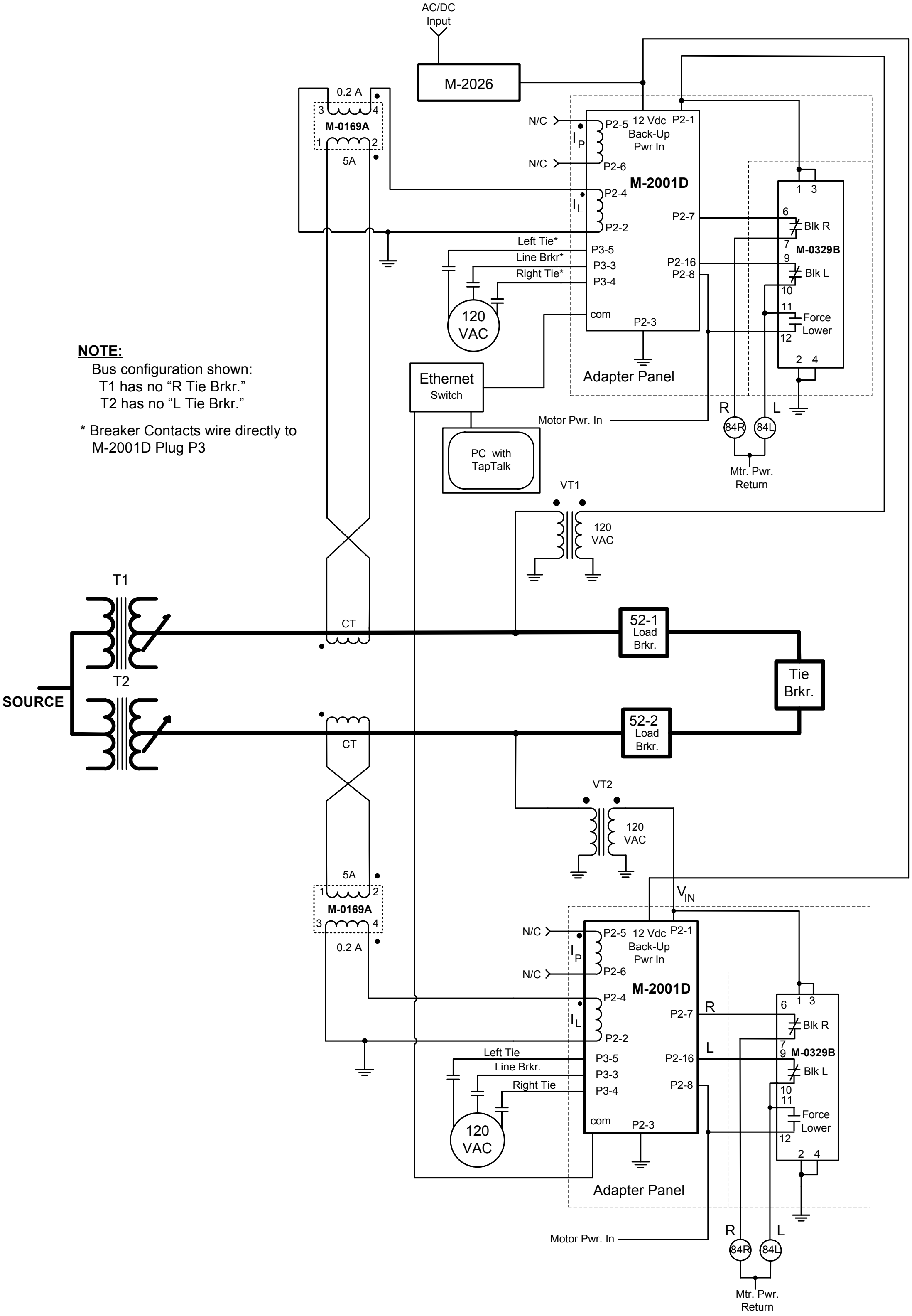

NOTE:
Bus configuration shown:
T1 has no "R Tie Brkr."
T2 has no "L Tie Brkr."

* Breaker Contacts wire directly to M-2001D Plug P3

■ **NOTE:** The M-2001D is shown mounted in a non-specific adapter panel. The M-2001D P2-X designations refer to the blue 24-pin connector. These connections are typically not user accessible when used with a Beckwith Electric adapter panel. Refer to the applicable Adapter Panel in **Appendix A** to determine the correct terminal numbers. Contact technical support for custom applications. P3-X designations refer to the green 5-pin connector.

Figure 7 Delta VAr Peer to Peer Paralleling (Two Transformers)

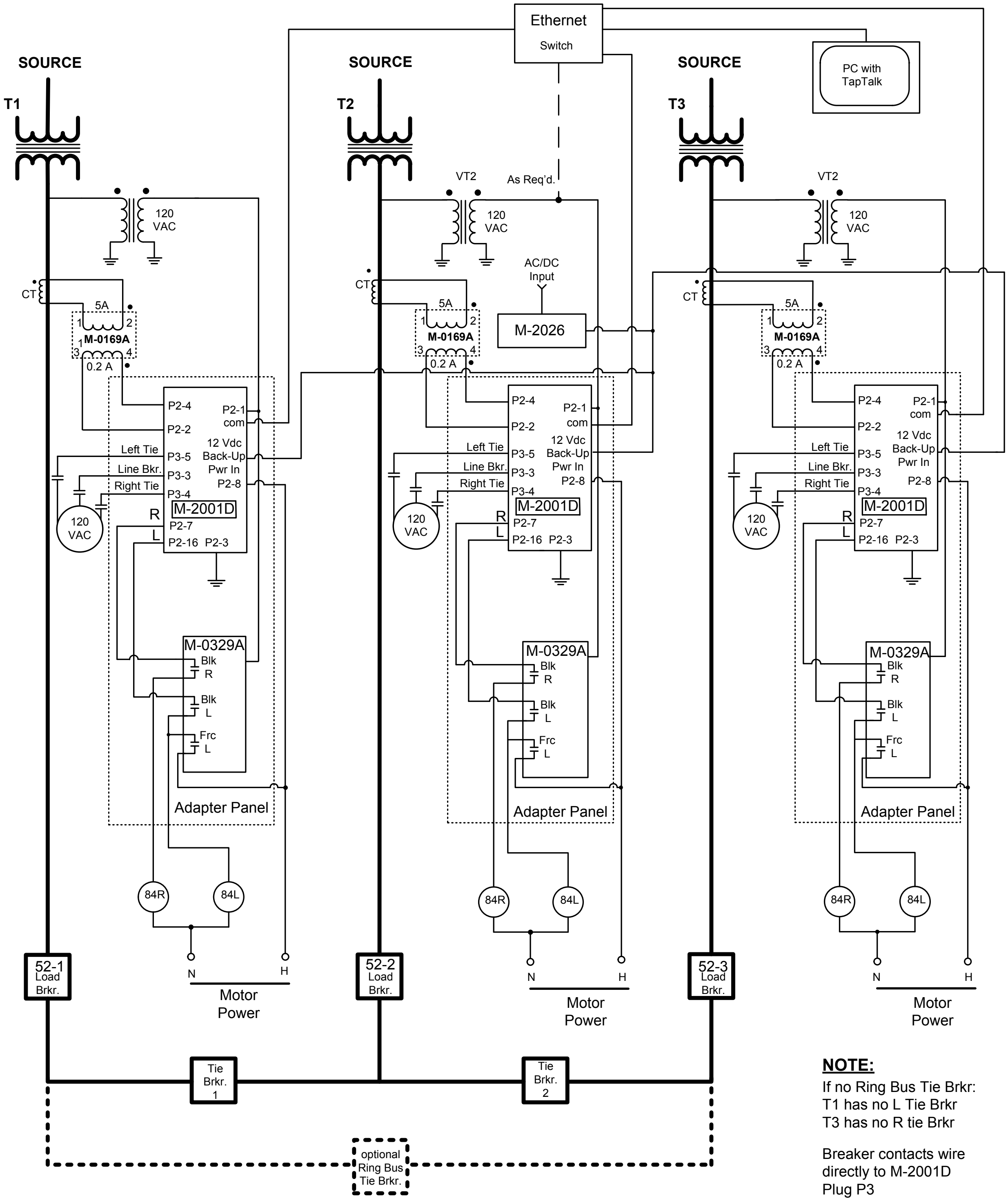

■ **NOTE:** The M-2001D is shown mounted in a non-specific adapter panel. The M-2001D P2-X designations refer to the blue 24-pin connector. These connections are typically not user accessible when used with a Beckwith Electric adapter panel. Refer to the applicable Adapter Panel in **Appendix A** to determine the correct terminal numbers. Contact technical support for custom applications. P3-X designations refer to the green 5-pin connector.

Figure 8 Delta VAr Peer to Peer Paralleling (Three Transformers)

Control Connections For Peer To Peer Paralleling																	
		Adapter Panels															
Control Connector P2	Function	M-2067B as M-0067E	M-2270B General Purpose	M-2280B GE-LTC	M-2339 AC UJ,IJ,MJ	M-2278 Siemens	M-2131B AVE-GEC	M-2174B Moloney	M-2279D PA 550	M-2379 PA 110/550	M-2354C PA 550	M-2220 MR MK20	M-2230 MR MK30	M-2286 West MS/ TM	M-2326 West. SJS	M-2324C PA. Reg	M-2347 UJ-1 Reg
P2-1	**Voltage Polarity**	TB1-1	TB1-10	TB3-1	TB4-3	TB3-3	TB1-1	TB3-1	TB3-10	TB4-72	TB1-10	TB1-1	TB1-1	Connect through existing "MS" & "TM" Round Multi-Pin Connec-tors	TB1-10	TB1-10	TB1-10
P2-2	**Line Current Return**	TB1-2	TB1-15	TB3-2	TB4-5*	TB3-5	TB1-4**	TB3-2	TB3-CT1	TB4-153	TB1-15	TB1-5	TB1-5		M-0169-1*	TB1-15	TB1-15
P2-3	**Voltage Return (Neutral)**	TB1-3	TB1-8	TB3-5	TB4-6	TB3-6	TB1-3	TB3-3	TB3-G	TB4-153	TB1-8	TB1-2	TB1-2		TB3-E10	TB1-8	TB1-8
P2-4	**Line Current Polarity**	TB1-4	TB1-14	TB3-3	TB4-4*	TB3-4	TB1-5**	TB3-4	TB3-CT2	TB4-258	TB1-14	TB1-10	TB1-10		M-0169-2*	TB1-14	TB1-14
P2-5	**Circulating Current Polarity**	TB1-6	TB1-4	TB3-9	TB4-2	TB3-2	TB1-6	TB3-6	TB3-287	TB4-187	TB1-4	TB1-11	TB1-11		TB1-4	TB1-4	TB1-4
P2-6	**Circulating Current Return**	TB1-5	TB1-3	TB3-8	TB4-1	TB3-1	TB1-7	TB5-5	TB3-285	TB4-185	TB1-3	TB1-12	TB1-12		TB1-3	TB1-3	TB1-3
P2-7	**RAISE Output**	TB1-7	TB1-5	TB3-6	TB4-10	TB3-10	TB1-10	TB3-7	TB3-25	TB4-63	TB1-5	TB1-18	TB1-18		TB3-E18	TB1-5	TB1-5
P2-8	**Motor Power Input**	TB1-8	TB1-9	TB3-4	TB4-9	TB3-9	TB1-9	TB3-8	TB3-52	TB4-71	TB1-9	TB1-19	TB1-19		TB3-E10	TB1-9	TB1-9
P2-16	**LOWER Output**	TB1-9	TB1-6	TB3-7	TB4-11	TB3-11	TB1-11	TB3-9	TB3-23	TB4-64	TB1-6	TB1-15	TB1-15		TB3-E15	TB1-6	TB1-6
P3-3	**Load Side Breaker**	Breaker Contacts, wetted with 120 Vac, wire directly to M-2001D Plug 3. Contacts do NOT connect through the Adapter Panel.															
P3-4	**Right Tie Breaker**	Breaker Contacts, wetted with 120 Vac, wire directly to M-2001D Plug 3. Contacts do NOT connect through the Adapter Panel.															
P3-5	**Left Tie Breaker**	Breaker Contacts, wetted with 120 Vac, wire directly to M-2001D Plug 3. Contacts do NOT connect through the Adapter Panel.															
		* = 5 Amp Input, ** = 1 Amp Input															

Table 1 Adapter Panel/Control Connections For Peer-To-Peer Paralleling (Delta VAr or Master/Follower)

Control Network Map Determination

The Delta VAr Peer to Peer Paralleling settings for each control must meet the criteria described below based on the Bus Topology. It is recommended that the user create a Control Network Map of the proposed Delta VAr Peer to Peer Paralleling scheme similar to those presented in Figure 9 through Figure 11.

The following criteria must be incorporated in the user's Control Network Map to properly implement the Delta VAr Peer to Peer Paralleling scheme:

- The Bus Topology must be identifiable as either Single Bus, Ring Bus or Double Bus.
- The Initiator in the initial setup of the network must always be at the highest position in the Control Network Map. For example, Position 8, Figure 9.
- The Paralleling Address of each control must be the same as the position that it is located at in the Control Network Map. For example, Position 7 = Address 7.

Bus Topology

Bus configurations are processed to divide the main paralleling group into several sub groups. The algorithm that is used to accomplish this task is called the Grouping Operation Algorithm (GOA).

The basic bus configurations supported are Single Bus, Ring Bus and Double Bus. In addition to obtaining VArs or load current information through communication, this method has the capability to recognize which transformers are still in parallel in the event of tie breakers or switches being opened or closed. Depending on the bus configuration, each control monitors 1 Line Breaker and 1 or 2 Tie Breakers.

A means to make commissioning of the paralleling system easier, TapTalk provides a feature to detect all Beckwith Electric controls that form part of the parallel network. After detection of the controls, depending on the bus configuration selected, the user can view the paralleling network as a whole and also individually configure each control.

Single Bus

A Single Bus with eight transformers is shown in Figure 9. LB1 through LB8 are the Line Breakers and TB1-2 through TB7-8 are the Tie Breakers. The user is required to enter the position of each control in the network.

The left most control should be given position 1 and consecutively increment this number as the user moves towards the right most control. It is important to note that the user should activate the Position 8 control last since this control is the Initiator, the one responsible to start any timing signal/messages. Refer to Figure 7 and Figure 8 for typical connections.

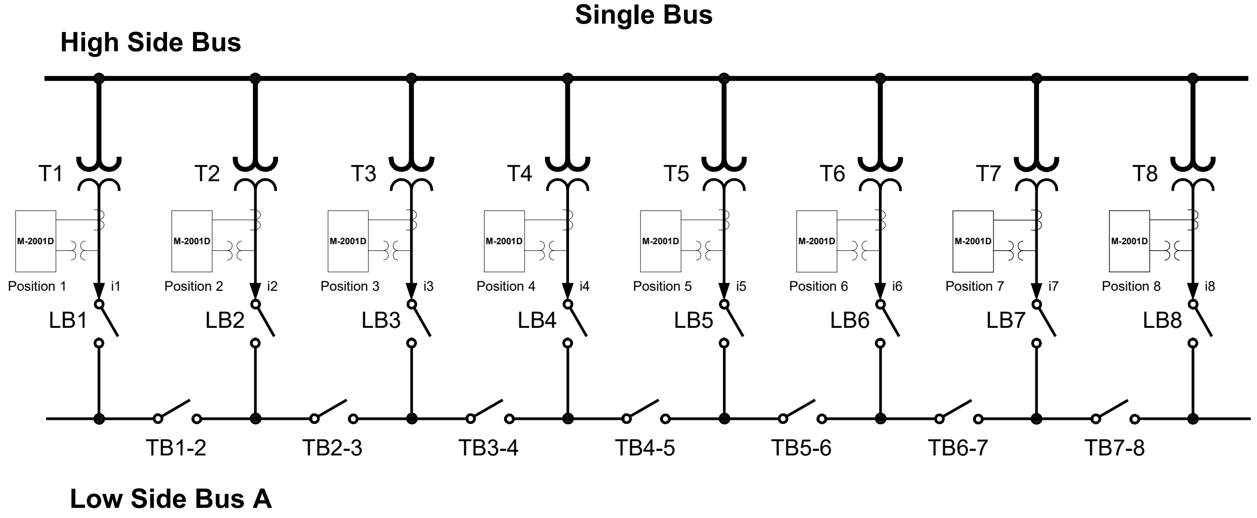

Figure 9 Single Bus Breaker/Control Network Map

Ring Bus

Figure 10 represents a Ring Bus with 8 transformers. LB1 through LB8 are Line Breakers and TB1-2 through TB8-1 are the Tie Breakers which take the transformer out of paralleling. As indicated in Figure 10, Transformer 8 is connected to Transformer 1 through the Tie Breaker TB8-1 which makes the single bus a special case of a ring bus.

To isolate a single transformer or create two sub-networks, at least two Tie Breakers must be open. For example, consider Figure 10. When it is time for the control in Position 8 on the ring bus to publish its GOOSE message, the control will determine whether Tie Breakers TB8-1 and TB7-8 are both open. If both are open, then the control in position 8 would operate in the independent mode, while transformers 1 through 7 remained in parallel. If Tie Breakers TB8-1 and TB6-7 are both open, this would create two sub-networks. Transformers 7 & 8 would be one paralleled network, and transformers 1 through 6 would be a separate paralleled network. Each network would operate individually as separate paralleled groups.

The Ring Bus application is similar to a Single Bus application except that the left and right most controls in the ring must evaluate the TB8-1 Tie Breaker and adjust the Delta VAr Peer to Peer Paralleling system accordingly. It is important to note that the user should activate the Position 8 control last, since this control is the Initiator, the one responsible to start any timing signal/messages. Refer to Figure 8 for typical connections.

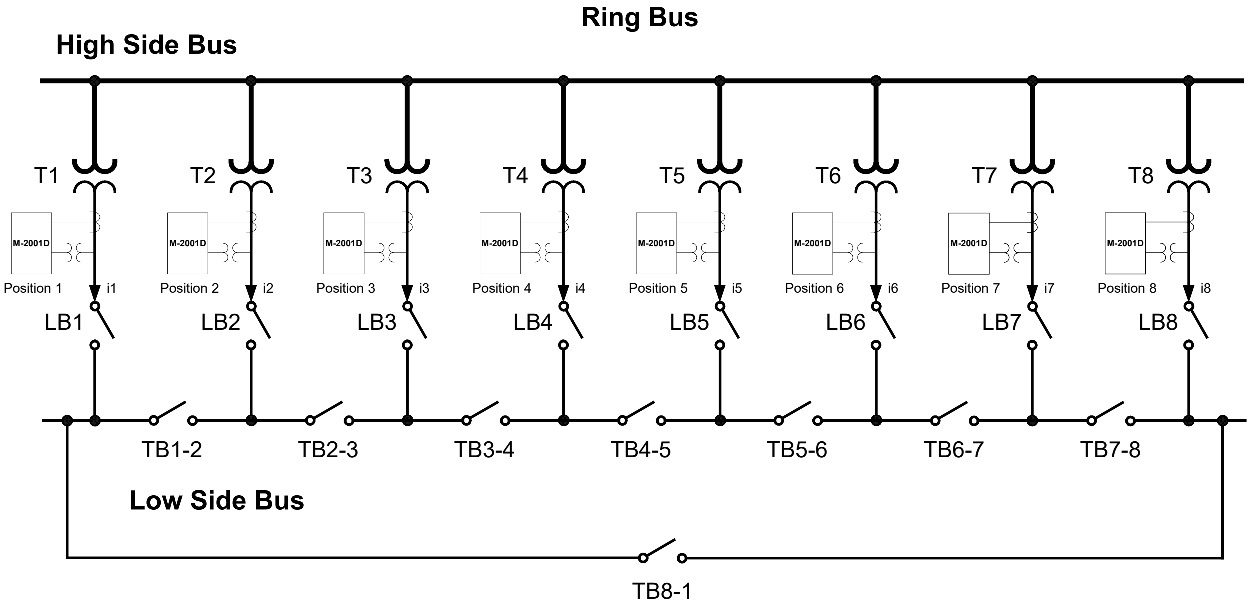

Figure 10 Ring Bus Breaker/Control Network Map

Double Bus

Figure 11 represents a Double Bus with eight transformers. LB1 through LB8 are the Line Breakers. DB1-A through DB8-A and DB1-B through DB8-B are Double Bus Breakers, which connect the transformer to either the Low Side Bus A or Low Side Bus B, or both.

As illustrated in Figure 11, there are two Low Side buses which the transformer can drive. The user must enter the position of the control in the network. The left most control should be given position 1 and consecutively increment this number as the user moves towards the right most control. It is important to note that the user should activate the Position 8 control last, since this control is the Initiator, the one responsible to start any timing signal/messages.

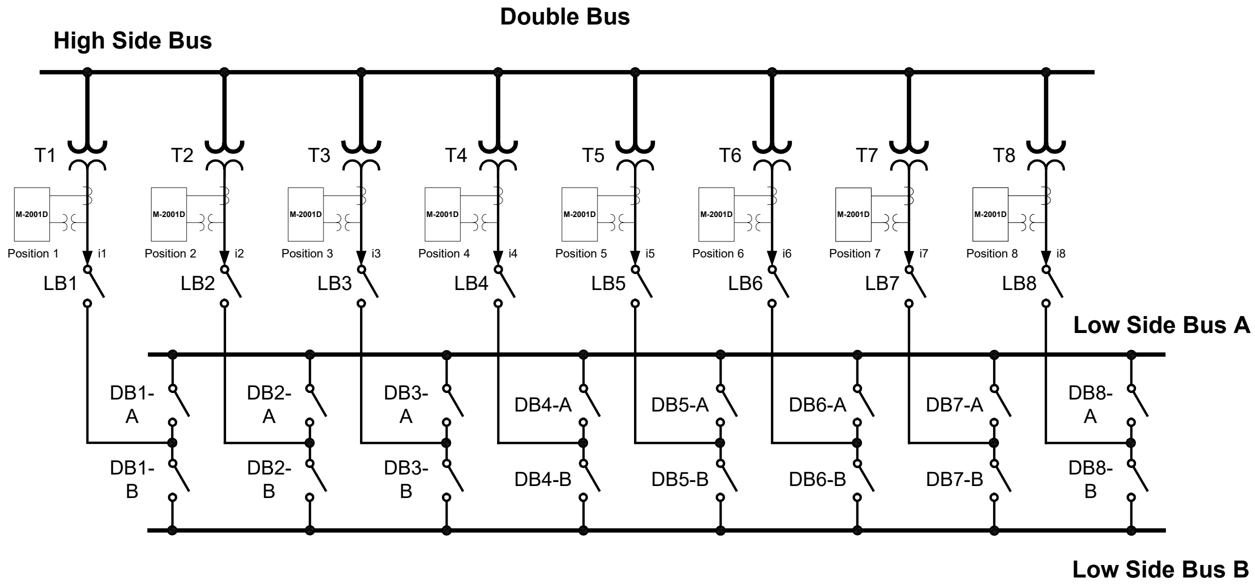

Figure 11 Double Bus Breaker/Control Network Map

In a Double Bus application, paralleling groups are formed in the following ways:

- If any adjacent Double Breakers DBx-A and DBx-B (on the same node Nx) are both Closed, then every transformer whose DBx-A or DBx-B double breaker is Closed is in parallel with each other.

  For example, if DB8-A and DB8-B are Closed, then if DB1-A, DB2-B, DB3-B, DB4-A, DB5-B, DB6-B, DB7-A are Closed, then all transformers are paralleled.
- There can be a maximum of two Paralleling Groups, only if none of the adjacent Double Breakers DBx-A and DBx-B (on the same node Nx) are both Closed.

  For example, if DB1-A, DB2-B, DB3-A, DB4-B, DB5-A, DB6-B, DB7-A, DB8-B then T1,T3,T5,T7 are in one group and T2, T4, T6, T8 are in the other group.

For reference, Table 2 is the truth table for a Double Bus application.

XFMR Position	1DA(x) Double Breaker	DB(x) Double Breaker	LB(x) Line Breaker	Parallel Condition
X	1	0	0	0
	0	1	0	0
	0	0	1	0
	1	0	1	1
	0	1	1	2
	1	1	1	3
	1	1	0	3

Table 2 Double Bus Truth Table

- **Parallel Condition = 0**
  The transformer at position "X" is not contributing to any load and not paralleling
- **Parallel Condition = 1**
  The transformer at position "X" is contributing to Low Side Bus A and is in Paralleling Group 1
- **Parallel Condition = 2**
  The transformer at position "X" is contributing to Low Side Bus B and is in Paralleling Group 2
- **Parallel Condition = 3**
  The Low Side Bus A and Low Side Bus B are tied together, therefore all transformers whose Parallel Condition = 1 or 2, are in parallel

■ **NOTE:** If a unit has either Tie Breaker closed, and any other unit has both closed, then the first unit (with one Tie Breaker closed) is still paralleled on both buses.

Grouping Operation Algorithm (GOA)

This GOA determines the action that is taken by the control when it detects any Open Tie Breakers (Figure 9) in the network.

Each control individually monitors the status of the Tie Breakers (A2, A3 Auxiliary Inputs) connected to its section of the bus, and broadcasts to all the other controls these statuses via a GOOSE message. Each control in turn processes the tie breaker statuses from the other controls to produce a map of the network every 64 ms.

Each control upon detecting a change in any Breaker status will issue a GOOSE message to update all the other controls in the network with the new information.

The following rules are applied to produce the Control Network Map (refer to Figure 9):

- The Initiator in the initial setup of the network should always be at the highest position in the network map (e.g. Position 8).
- The paralleling address of each control should be the same as the position it is located in the network map (e.g. Position 7 = Address 7).
- All GOOSE messages are sorted according to their corresponding paralleling addresses.
- The control scans all the tie breakers statuses (if any) in the downstream positions to find the downstream boundary.
- The first OPEN status indicates the boundary has been reached. Similarly the control scans all the upstream tie breaker statuses (if any) to find the upstream boundary. Once the boundaries are located the sub network is defined.
- In each sub network the control with the highest paralleling address becomes the Initiator.
- If the control is a Initiator, the control will determine how many Non-Initiators are in its network.
- The Initiator then starts the paralleling calculations in the controls in its network (or sub network).

DELTA VAR PEER TO PEER PARALLELING MODES

Each transformer in a paralleling scheme must be in one of three modes, described in the following examples:

- Paralleled Mode
- Independent Mode
- Disconnected Mode

Figure 12 illustrates a simplified paralleling scheme on a single bus.

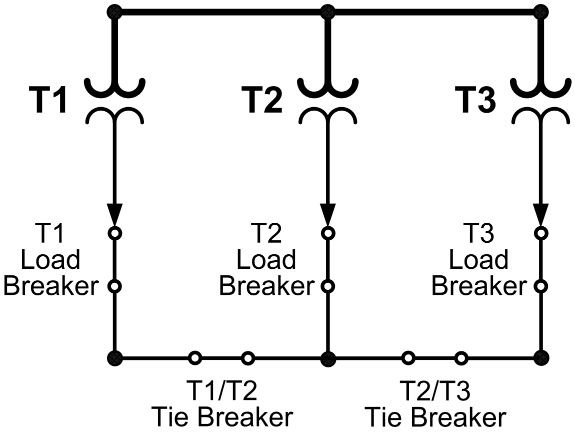

Figure 12 Peer to Peer Paralleling Scheme Example – Common Bus

Paralleled – This is defined as two or more transformers directly connected to a common bus and sharing the load. These transformers must operate in a coordinated manner to regulate the common bus voltage, while minimizing circulating current between the transformers caused by a separation of tap positions. This includes when the line drop compensation (LDC) settings are not zero. Typically, there is a Load (or Line) Breaker connected to a section of the bus, with a Tie Breaker connecting the two sections of the bus. As illustrated in Figure 12, when all the breakers are closed, T1, T2 and T3 are paralleled together. If the T1/T2 Tie Breaker is opened, then only T2 and T3 are paralleled. The Peer to Peer paralleling scheme will calculate the DeltaVAr values of only those transformers that are paralleled together.

Paralleled Mode also applies to a condition when a transformer has one (or both) Tie Breakers closed to an adjacent bus, and the Load Breaker of the transformer connected to that bus is open. This is also defined as Paralleled Mode, because the transformer with the open Load Breaker would become paralleled once the Load Breaker is closed, due to the fact that the Tie Breaker(s) are already closed. In this bus configuration, the stand-alone transformer operates like it is in Independent Mode.

Independent – This is defined as a single transformer connected to a bus and regulating that bus voltage. This includes when the line drop compensation (LDC) settings are not zero. There can be no circulating current when only a single transformer is connected to the bus. The Peer to Peer paralleling scheme will not calculate the DeltaVAr values of transformers in Independent Mode.

Disconnected – This mode of operation occurs when the Load Breaker is open and the transformer is no longer connected to its section of the bus. There is no load current flowing. Since there is no load current, the LDC calculations will be zero. The M-2001D control does not operate its tapchanger when the Load Breaker is open. For example, when the T1 Load Breaker is open, and all other breakers (Load and Tie) are closed, then T2 and T3 are paralleled together, while T1 is in Disconnected Mode. The Peer to Peer paralleling scheme will not use the watts and VArs from the transformer in Disconnected Mode. The Disconnected Mode is not affected by Tie Breaker operations. When a transformer is disconnected, it remains in Disconnected Mode, regardless of whether its Tie Breakers are closed or open.

Ring Bus Configuration

In a Ring Bus configuration (Figure 13), these same Mode definitions apply, but multiple Tie Breaker operations are required before a transformer will go to Independent Mode. For example, if all the Ring Bus Breakers (Load and Tie) are closed, **except** the T1/T2 Tie Breaker, then all three transformers are still paralleled together. If the T1/T3 Tie Breaker is also opened, then T1 will go to Independent Mode, and only T2 and T3 are paralleled together.

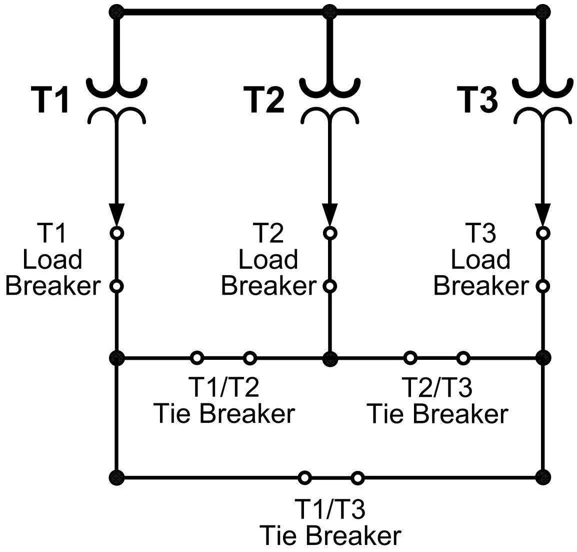

Figure 13 Peer to Peer Paralleling Scheme Example – Ring Bus

Double Bus Configuration

In a Double Bus configuration (Figure 14), these same Mode definitions also apply. However, there can only be a maximum of two paralleled groups, with a maximum of two Independent transformers, since there are only two buses. When **both** T1 and T2 Load Breakers, T1A, T2A, T1B and T2B Tie Breakers are closed, then they are paralleled on both Bus A and Bus B. By definition, T3 cannot be independent, because if either the T3A or T3B Tie Breakers close, then T3 will be paralleled with T1 and T2.

Another example is when T1 and T2 are both connected to only Bus A and not connected to Bus B (they are paralleled), then T3 could be connected to Bus B and T3 would be in Independent Mode.

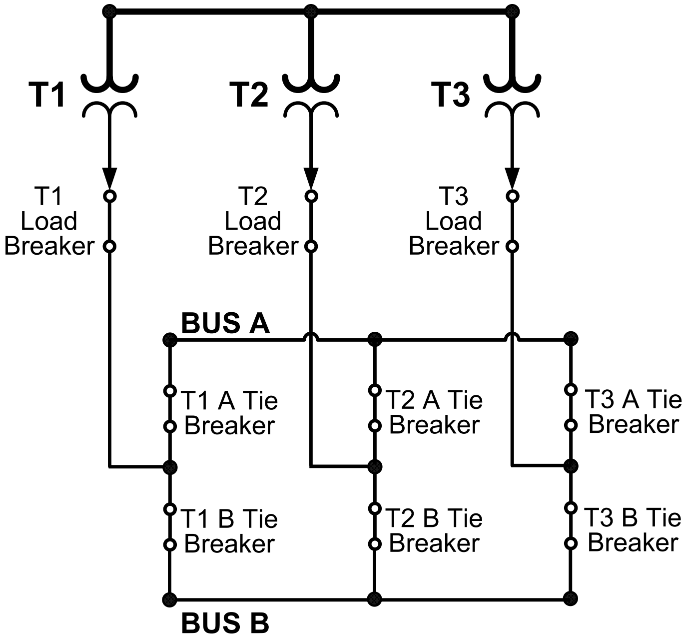

Figure 14 Peer to Peer Paralleling Scheme Example – Double Bus

PARALLEL/INDEPENDENT SWITCH INPUT WITH DELTA VAR PEER TO PEER

A Parallel/Independent Switch contact may be programmed to an existing M-2001D digital input. The existing digital inputs are now used for several different functions. Therefore, the Parallel/Independent Switch input is not defined to a specific input, but may be programmed to an existing available **unused** input. Operational Modes pre-defined by other system settings will determine which inputs are available. See Table 3 for examples. When available, the Parallel/Independent input may be programmed to Input 1, Input 2, Input 3, Voltage Reduction step 1 Input, Operation Counter Input, or Neutral Tap Input.

Application

In the analog scheme of paralleling, the M-0115A has a physical Parallel/Independent Switch which controls whether the local M-2001D control receives circulating current and forces the load currents of the paralleled controls to be equal. When this switch is placed into Independent for testing, the circulating current and the "half" current path to that local control are opened and two other circuits are shorted, removing the load current of that control from the paralleling scheme. This effectively removes that control from the paralleling scheme and the control operates in Independent Mode, with its actual transformer load current, and no influence of any circulating current that may be present in the physical transformer.

In this condition, the transformer is still physically connected to the bus and still electrically paralleled with the other transformers. If there are two or more remaining controls they will continue to operate in parallel together. If there is only one remaining control, it will also effectively operate in Independent Mode. Manual and Automatic operation of the transformer in Independent Mode can be used to verify the correct operation of the control. Manually moving the tap position of the local transformer will still generate circulating current in the paralleled transformers but the local control does not receive this current.

Parallel/Independent Switch Input

With the Parallel/Independent Switch input, the M-2001D control may be placed into Independent Mode for testing, similar to the analog method. The local M-2001D will go into Independent Mode and this status will be broadcast to all the other paralleled controls. The local control can then be tested in either Manual or Automatic while in Independent Mode (no influence by the paralleling scheme, just like the M-0115A based paralleling method).

Testing the Local Control in Independent Mode

While in Manual, the local control is tested by manually raising and/or lowering the tap position, and then placing the control back into Automatic to verify correct operation of the control in Independent Mode. When the local control is being tested, it will generate circulating current just like the analog method. When the remaining paralleled transformers detect that the local control has been placed into Independent operation, but is still physically connected to them, they will continue to calculate their Delta VArs to operate in parallel. The remaining paralleled transformers will not use the VAr data of the transformer in Independent Mode.

After the local transformer has been tested, it is placed back into Parallel Mode, this status change is broadcast, and the local transformer will again be paralleled with the transformers in the paralleling group. When testing a local transformer in Independent Mode, the other paralleled transformers should be placed into Manual, so that the bus voltage does not move during the local transformer testing.

Commissioning and Testing Delta VAr Peer to Peer Parallel/Independent Switch

To test or commission the Delta VAr Peer to Peer method, place all the paralleled transformers into Manual, so they do not move the tap position. Then manually move the tap position of one or more transformers while keeping the voltage in-band, and observe the Delta VAr currents in each transformer to verify they are operating correctly. This verification continues by moving the tap positions of the transformers apart from each other, so that all the controls are calling for either a raise or lower with the bus voltage still in-band. Then place all of the controls into Automatic at about the same time. After the controls have stopped moving, the Delta VAr current of each transformer is checked again to verify they have reached the minimum Delta VAr current. Refer to **Delta VAr Peer to Peer Paralleling Checkout Procedure** later in this section.

Inputs Available for P2P Parallel/Independent Switch		**Example 1**	**Example 2**
Input Pin #	**Input Settings Selections** (Settings in parentheses are Operational Modes pre-defined by other system settings)	**Tap Information DISABLED**	**Tap Information Contact KeepTrack 1N**
Input 1 P2-13	Motor Seal-In Auto/Manual Switch Status *P2P Parallel/Independent Switch* (SCAMP Input for Auto/Manual)	Available	Available
Input 2 P2-17	Non-Sequential SCADA Cutout *P2P Parallel/Independent Switch* (Op Counter for LTC HeartBeat)	Available	Available
Input 3 P2-9	Voltage Reduction Step #2 Aux *P2P Parallel/Independent Switch* (Contact KeepTrack 1N Lower)	Available	**NOT AVAILABLE** Contact KeepTrack 1N Lower
Additional Inputs that can be assigned as P2P Parallel/Independent Switch (when available)			
VR1 P2-18	(Voltage Reduction Step #1) (Contact KeepTrack 1N Raise)	Available	**NOT AVAILABLE** Contact KeepTrack 1N Raise
Op Counter P2-12	(Operation Counter) (Switch Status with Motor Seal-In) (SCAMP Input with Motor Seal-In) (Contact KeepTrack 1R1L-1L) (Cam Follower)	Available	Available
Neutral P2-15	(Neutral Tap Input) (Contact KeepTrack 1N) (Contact KeepTrack 1R1L-1R)	Available	**NOT AVAILABLE** Contact KeepTrack 1N

■ **NOTE:** These are only two examples of common configuration scenarios. Based on the user's specific application settings, the P2P Parallel/Independent Switch Input can be selected from one of the remaining unused available inputs.

■ **NOTE:** The M-2001D P2-X designations refer to the blue 24-pin connector. These connections are typically not user accessible when used with a Beckwith Electric adapter panel. See Table 1 to determine the correct terminal numbers for the most common Adapter Panels. Contact technical support for custom applications.

Table 3 P2P Parallel/Independent Switch Available Inputs Examples

P2P Parallel or Independent Mode when No Input is Available

For cases where it is not possible to have a Parallel/Independent Switch Input, the front panel HMI of the M-2001D may be used to select Parallel or Independent operation. The HMI also displays the Parallel/Independent status of the control. The simple method to determine a control's Paralleling Mode status, is to press the **ENT** pushbutton **four times** from the User Lines screen.

> ■ **NOTE:** For ease of use, it is recommended to install a sign or label close to the control, that describes this method of observing the Parallel/Independent status, and changing the Parallel/Independent Mode using the front panel.

The screen sequence is described in detail in the following steps.

> ■ **NOTE:** These screens are only accessible with Delta VAr Peer to Peer Paralleling method selected.

1. From the User Lines screen, press **ENT**.

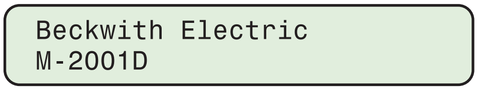

```
Beckwith Electric
M-2001D
```

2. The menu will advance directly to "UTILITIES".

```
         UTILITIES
←COMM              MNTR→
```

3. Press **ENT** again. The unit will advance to the following:

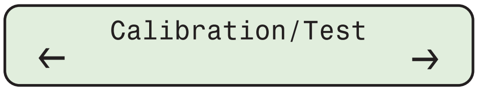

```
     Calibration/Test
←                        →
```

4. Press **ENT** again. The unit will display the following:

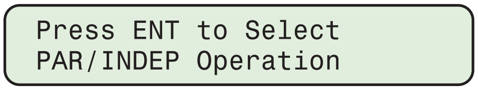

```
Press ENT to Select
PAR/INDEP Operation
```

5. Press **ENT** again. The unit will display one of the following screens, based on the actual Paralleling Mode of the control. LINE 1 displays the Paralleling Mode status, LINE 2 displays the action required to change the Paralleling Mode.

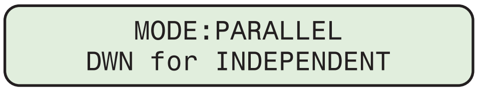

```
      MODE:PARALLEL
   DWN for INDEPENDENT
```

```
     MODE:INDEPENDENT
      UP for PARALLEL
```

Press the **UP** or **DOWN** pushbutton as indicated, to switch the Paralleling Mode. Press the **EXIT** pushbutton to immediately change the Paralleling Mode (allow approximately a 10 second delay). The ENT pushbutton has no effect on this setting. If no pushbutton is pressed after the Paralleling Mode selection, the unit will change to the selected mode after 15 minutes, when the unit returns to the User Lines display.

SYMPATHY MANUAL OPERATION WITH DELTA VAR PEER TO PEER

Application Overview

Sympathy Manual operation, when enabled, allows M-2001D controls in a Delta VAr Peer to Peer Paralleling scheme to automatically go into Manual operation when any other paralleled control's Auto/Manual switch is placed into Manual operation. The status of the Auto/Manual input is broadcast to other paralleled M-2001D controls, and those controls will also switch to Manual operation, to prevent incorrect Automatic operation. This is referred to as being in **Sympathy Manual** operation. The Sympathy Manual feature is enabled in either TapTalk or the front panel HMI.

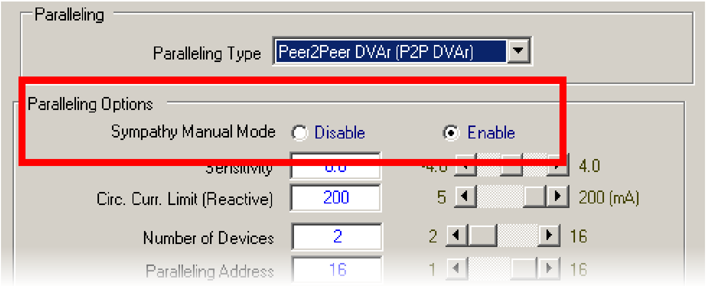

Paralleling

Paralleling Type: Peer2Peer DVAr (P2P DVAr)

Paralleling Options

Sympathy Manual Mode ○ Disable ● Enable

Sensitivity 0.0 -4.0 4.0

Circ. Curr. Limit (Reactive) 200 5 200 (mA)

Number of Devices 2 2 16

Paralleling Address 16 1 16

Figure 15 TapTalk Peer to Peer Paralleling Enable Sympathy Manual Mode

Application with Local Communications Equipment

In this example, a communications based I/O device is used in the transformer cabinet to drive the breaker status inputs of the M-2001D. If this I/O device fails, it will no longer be supplying accurate information about the breaker status to the controls in the paralleling scheme. This could potentially cause issues with P2P Delta VAr paralleling.

In this instance, the Alarm contact of the communications based I/O device is used as an input to the M-2001D to block the control from performing automatic operations. The Alarm contact of the I/O device is connected to the Auto/Manual switch status input of the M-2001D. Upon the alarm condition, the local control is placed into Manual operation and any Automatic operations are blocked. The status of the Auto/Manual input is broadcast to the other paralleled M-2001D controls, and they also switch to Manual operation. Once the Alarm of the I/O device is cleared, the local control will then switch back to Automatic operation, and this new status is broadcast to the other paralleled controls, and they will also switch back to Automatic operation.

The M-2001D Auto/Manual switch input is typically used to monitor the position of the Auto/Manual switch on the Adapter Panel. When the switch is in the Auto position, the contact closes indicating the control is in Automatic operation. In the Manual position, the contact opens and the control recognizes it is in Manual operation. The normally closed alarm contact of the communications device (opens when the device fails) should be connected between the 12 Vdc wetting voltage of the adapter panel and Pin 13 of the blue control connector P2. A special pin is needed to plug into the blue P2 connector. Beckwith Electric assembly B-1210 is available for this purpose and is pre-assembled with the pin crimped to a wire with the required series resistor. If the Auto/Manual switch is already being monitored, then the normally closed contact of the communications device will need to be placed in series with the existing wiring from the Auto/Manual switch to the 12 Vdc wetting voltage.

Application when Testing a Control in Independent Mode

When testing is performed on an individual local control, the local control would be placed in Independent Mode, and then also placed in Manual operation. Because the local control is in Independent Mode, the other paralleled controls will **not** go into Sympathy Manual operation. However, it is recommended to place one of the other controls (connected to the same bus), into Manual operation, so that the remaining controls will go into Sympathy Manual mode. This allows the local control (in Independent Mode) to be tested.

Application when Commissioning Testing

During commissioning testing, when one control is placed into Manual, all the paralleled controls will go into Sympathy Manual. The tap positions can then be manipulated manually to generate circulating VArs and keep the voltage in-band. When the local control is switched back to Auto, all the paralleled controls would also switch back to Auto operation.

Overview of Sympathy Manual Operation

■ **NOTE:** Sympathy Manual operation only applies to P2P Delta VAr paralleling.

The Auto/Manual switch position of each paralleled control is broadcast, so that all paralleled controls know the position of the Auto/Manual switch of each control in the paralleling group. This allows the paralleled controls to recognize when any Auto/Manual switch changes to Manual. When **any** paralleled control's Auto/Manual switch changes to the Manual position, all paralleled controls go into Sympathy Manual operation. When **all** the paralleled controls' Auto/Manual switches are once again in Auto, all controls revert back to automatic operation.

Each control recognizes and remembers how it was placed into Manual operation:

- The control was placed into Manual by its own local Auto/Manual physical switch
- The control was placed into Manual remotely via communications
- The control was placed into Manual because of the broadcast status of the physical switch of another control (Sympathy Manual)

The control will then operate in Manual until the associated input status changes. If a control is operating in Sympathy Manual, it will switch back to Automatic when the reference control is physically placed back into Automatic operation. Another condition that will clear Sympathy Manual mode, is when a breaker status change occurs, which results in the control no longer being in parallel with the reference control.

The local Auto/Manual physical switch being in Manual, or in Manual Remote Control, has priority over tracking the Auto/Manual status of another M-2001D control. When all the paralleled controls of a group are in Auto operation, and Remote Control is used on any control, only that control will go to Comm Block, and the other paralleled controls will **not** go into Sympathy Manual operation.

The Remote Control function is not affected by the Sympathy Manual feature and will function normally. The Comm Block caused by the Remote Control is a separate status from the Sympathy Manual status. It is possible for one control to be in both Remote Control Comm Block and Sympathy Manual at the same time.

Auto/Manual Switch and Sympathy Manual Operation Examples

The following examples use the scenario of four transformers in a Delta VAr Peer to Peer paralleling scheme. A simplified diagram is illustrated in Figure 16, with the M-2001D controls referenced as Control 1 through Control 4.

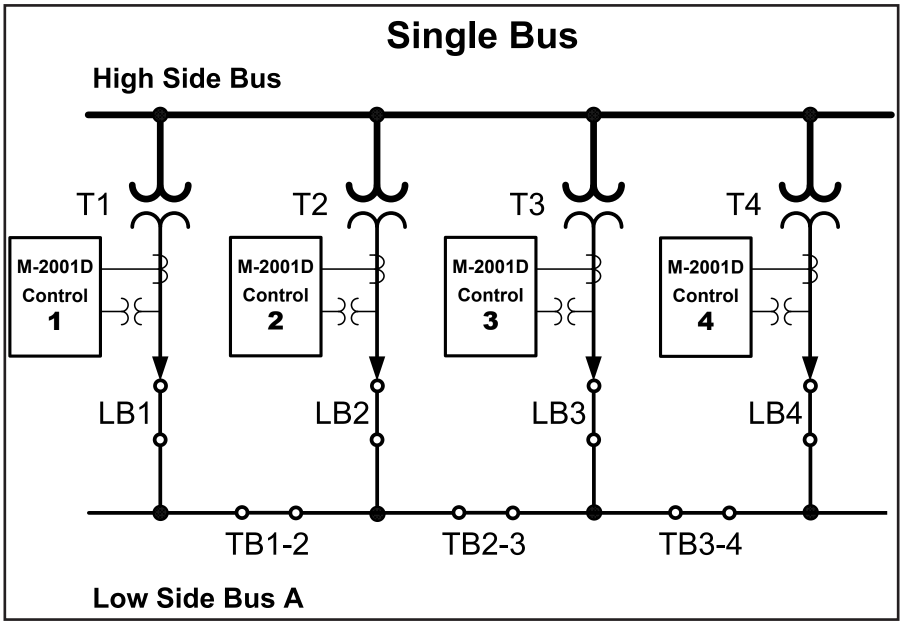

Figure 16 Four Transformer Delta VAr Peer to Peer Sympathy Manual Example

Control 2 Placed in Manual Operation

If the Auto/Manual switch of **Control 2** is placed in **Manual**, it goes into Manual operation and broadcasts its Auto/Manual switch position to **Controls 1/3/4**. Controls 1/3/4 see the Auto/Manual switch of Control 2 change to Manual and they will go into **Sympathy Manual** operation. While the controls are in Sympathy Manual operation, the Remote Control function will still operate normally. The tap position of **any** control (except Control 2) can be remotely controlled.

Control 2 Returns to Auto Operation

When the Auto/Manual switch of **Control 2** returns to **Auto**, it resumes Auto operation and broadcasts its new switch position to **Controls 1/3/4**. Controls 1/3/4 see the Auto/Manual switch of Control 2 change to Auto and they will return to **Auto** operation, assuming that no other control's Auto/Manual switch position has changed.

Controls 2 and 4 Placed in Manual Operation

If the Auto/Manual switches of **Control 2** and **4** are placed in **Manual**, then **Controls 1** and **3** go into **Sympathy Manual** operation. When the Auto/Manual switch of **Control 2** goes back to **Auto**, then **Controls 1/3/4** remain in Manual operation, because **Control 4** still has its Auto/Manual switch in Manual. When the Auto/Manual switch of **Control 4** goes back to **Auto**, then **ALL** controls will go to Auto operation.

All Controls in Auto Operation with Control 3 in Remote Comm Block

A control's local Auto/Manual switch position in Manual, or the control being remotely blocked, has priority over Sympathy Manual. A control with either or both of these conditions does not follow or track another control's Auto/Manual switch. It will remain in Manual operation even if all the other control's Auto/Manual switches are in Auto.

If **Control 3** is **Remotely Blocked**, and the Auto/Manual switches of **Controls 1/2/4** are in **Auto**, then **Control 3** will remain in Manual operation due to the Remote Block. If another control's Auto/Manual switch changes to Manual, **Control 3** will remain in Manual because of the Remote Block **and** Sympathy Manual.

Sympathy Manual Status when Breaker Status Changes

When one control is in **Manual** and the other 3 paralleled controls are in **Sympathy Manual**, if a **Tie Breaker opens** to separate the 4 controls into **two separate** paralleling groups, the Sympathy Manual status is checked. When a control is no longer paralleled with the original control that was in Manual, its Sympathy Manual status is cleared, since it is no longer in that paralleling group. That control will then check the Manual status of the controls in the **new** paralleling group to determine if any of those controls are in Manual. Whenever a Breaker Status change occurs, the Sympathy Manual status will be checked. If the control is no longer paralleled with a control in Manual, the Sympathy Manual status will be cleared.

DELTA VAR PEER TO PEER PARALLELING – CONTROL SETUP FROM TAPTALK

TapTalk Setup/Configuration/Paralleling

The Delta VAr Peer to Peer settings for each control are available in the TapTalk **Setup/Configuration** screen (Figure 17). TapTalk also includes the **P2P System Manager** in the Configuration menu with dropdown selections for DVAr Paralleling and Master/Follower Paralleling Configuration Tools.

> ■ **NOTE:** This procedure requires communication to be established with the target control (Initiator or Non-Initiator) with Level 2 Access.

> ▲ **CAUTION:** Until the Initiator control is added to the Delta VAr Peer to Peer Paralleling scheme the Non-Inititator controls will not respond to system changes.

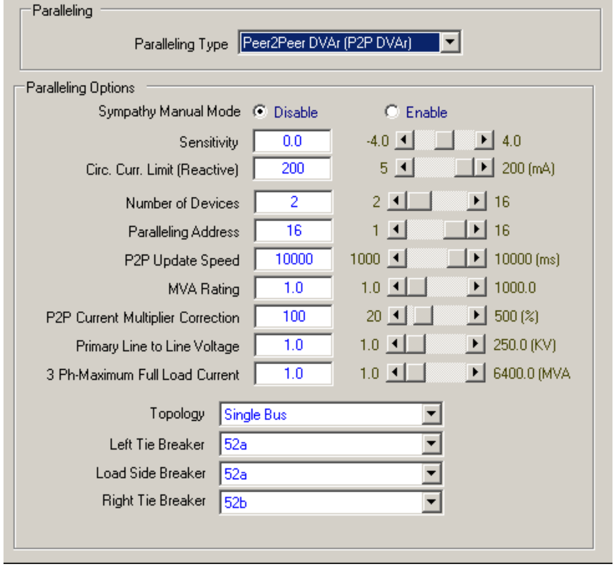

Paralleling

Paralleling Type: Peer2Peer DVAr (P2P DVAr)

Paralleling Options

Sympathy Manual Mode: ● Disable ○ Enable

Setting	Value	Min	Max
Sensitivity	0.0	-4.0	4.0
Circ. Curr. Limit (Reactive)	200	5	200 (mA)
Number of Devices	2	2	16
Paralleling Address	16	1	16
P2P Update Speed	10000	1000	10000 (ms)
MVA Rating	1.0	1.0	1000.0
P2P Current Multiplier Correction	100	20	500 (%)
Primary Line to Line Voltage	1.0	1.0	250.0 (KV)
3 Ph-Maximum Full Load Current	1.0	1.0	6400.0 (MVA

Topology: Single Bus

Left Tie Breaker: 52a

Load Side Breaker: 52a

Right Tie Breaker: 52b

Figure 17 Delta VAr Peer to Peer Paralleling Settings (Configuration Screen)

To setup the controls in the Delta VAr Peer to Peer Paralleling scheme proceed as follows:

1. Determine the number of controls in the Paralleling scheme from the Control Network Map.
2. For the first Non-Initiator control, verify that all the appropriate control settings other than the "Paralleling Type" have been entered for the control application.
3. In the TapTalk Configuration/Paralleling Type (Figure 17) select "Peer2Peer DVAr".
4. In the Paralleling Options section, enter the following settings consistent with the control's position in the Control Network Map:
   - Enable or Disable Sympathy Manual Mode.
   - Sensitivity (-4.0 to +4.0) – Allows the user to scale the control's reaction to changes in Reactive Circulating Current (I_{rc}). The following data demonstrates the linear relationship between the Sensitivity setting and the % Multiplier:
   - $-4.0 = I_{rc} \cdot 50\ \%$
   - $-2.0 = I_{rc} \cdot 75\ \%$
   - $0.0 = I_{rc} \cdot 100\ \%$
   - $+2.0 = I_{rc} \cdot 150\ \%$
   - $+4.0 = I_{rc} \cdot 200\ \%$
   - Reactive Circulating Current Limit – The maximum Delta VAr value allowed for bandcenter adjustment. Range and units are dependent on the Aux Current Transformer units display setting in the M-2001D:

CT Display	Range	Units
200 mA	5 to 200	mA
1 A*	0.02 to 1.00	A
5 A*	0.1 to 5.0	A

*These are calculated from the actual 200 mA connected current.

- Number of Devices – The number of total devices that are in the paralleling scheme (2 to a maximum of 16 inclusive of the Initiator).
- Paralleling Address (Control Network Map position 1 to X)
- Peer to Peer Update Speed – The time period allocated to read all the paralleled units' relevant data, make the necessary calculations and disseminate paralleling driven updates to the system (1000 to 10000 ms)
- MVA Rating – MVA rating of the transformer (1.0 to 1000.0)
- Peer to Peer Current Multiplier Correction – A scaling factor to compensate Delta Vars Calculation, if the CT value is not in the ratio to the MVA rating (20 to 500 %)
- Primary Line to Line Voltage (1.0 to 250.0 KV) – Refer to "Line Drop Compensation Calculations for Peer to Peer DVAr Paralleling" in the following section.
- 3 Phase Maximum Full Load Current (1.0 to 640.0 MVA) – Refer to "Line Drop Compensation Calculations for Peer to Peer DVAr Paralleling" in the following section.
- Topology (Single Bus, Ring Bus or Double Bus)
- Load Side Breaker Configuration (Not Used, 52a, or 52b)
- Right Tie Breaker Configuration (Not Used, 52a, or 52b)
- Left Tie Breaker Configuration (Not Used, 52a, or 52b)

5. Repeat Steps 2 through 4 for the remaining Non-Initiator controls.

> ▲ **CAUTION:** After placing the Initiator control in the Delta VAr Peer to Peer Paralleling scheme the controls will not respond to any tapchange requests for 30 seconds.

6. Repeat Steps 2 through 4 for the Initiator control.
7. The Delta VAr Peer to Peer Paralleling scheme is now in effect.

   The proper operation of the Delta VAr Peer to Peer Paralleling scheme should be verified by performing the "Delta VAr Peer to Peer Paralleling Checkout Procedure".

Line Drop Compensation Calculations for Peer to Peer DeltaVAr Paralleling

Fundamental principles used for the LDC R_{Set} and X_{Set} calculations are described in **Appendix F, Basic Considerations for the Application of LTC Transformers and Associated Controls**. In this Appendix, an example of a CT rated at 600 A primary current is used. However, when using the Peer to Peer DeltaVAr Paralleling method, instead of 600 A, the actual expected rated full load primary current or the maximum expected current must be used. Therefore, two additional settings are provided in the Peer to Peer DVAr settings screen (Primary Line to Line Voltage and Three-Phase Maximum Full Load Current).

Example:

A **feeder** with a primary Line-to-Line rated voltage of 13.8 KV, and a **load** with a maximum expected rated full load (MVA_{FL}) of 10 MVA. The rated full load current is calculated as:

$I_{FL} = [(10 \times 1000) / (\sqrt{3} \times 13.8)] = 418.37$ A

where the ($\sqrt{3} \times 13.8$) is the rated phase to phase voltage setting

Now the PU base impedance is calculated as follows:

$Z_{Base} = [(13.8 \times 1000) / (\sqrt{3} \times 418.37)] = 19.04$ Ohms

Following the example given in Appendix F, for a 1.1 mile feeder with a resistance (r) 0.385 Ohms/conductor/mile and a reactance (x) of 0.598 Ohms/conductor/mile:

The total line resistance (R) and reactance (X) in ohms is:

$Z = (R + jX) = 1.1(r + jx) = 1.1\,(0.385 + j0.598) = 0.424 + j0.658$ Ohms

Now the line drop compensation required in PU is determined using the following equations:

The per unit resistance is $Z/Z_{Base} = (0.424 + j0.658) / 19.4$

$Z = R + jX$ in PU $= 0.0223 + j0.0345$ PU

The line drop compensation settings R_{Set} and X_{Set}, in secondary voltage, can be calculated by multiplying the per unit resistance times the rated VT secondary voltage (typically VTs are selected to give a rated secondary voltage of 120 V).

Assuming a VT with a secondary voltage of 120 V, the resistance and reactance compensation settings are calculated as:

$R_{Set} = 0.0223 \times 120 = 2.7$ V

$X_{Set} = 0.0345 \times 120 = 4.1$ V

When using the P2P DeltaVAr paralleling method, in addition to the R_{Set} and X_{Set} settings, the user must also set the expected full load MVA capacity and the rated primary Line-to-Line voltage of the feeder.

TapTalk P2P System Manager – DVAr Paralleling Configuration Tool

TapTalk includes a Peer to Peer Paralleling (DVAr) Configuration Tool in the **Setup/P2P System Manager** menu (Figure 18). This tool assists in configuring and monitoring the controls in the Paralleling scheme.

The tool allows the user to discover on a Local Area Network (LAN) all the Beckwith Electric M-2001D controls that have the Delta VAr Peer to Peer feature. Note that the Delta VAr Peer to Peer Paralleling scheme can only be implemented on controls that are on the same network. In addition, if a multiple network adapter exists on the host computer the configuration tool will allow the user to select which network card the tool is to perform the discover of all M-2001D controls. Failure to choose the correct network card may result in the tool not discovering all the available M-2001D controls.

> ■ **NOTE:** This procedure requires communication to be established with the target control (Initiator or Non-Initiator) with Level 2 Access.

> ▲ **CAUTION:** Until the Initiator control is added to the Delta VAr Peer to Peer Paralleling scheme the Non-Inititator controls will not respond to system changes.

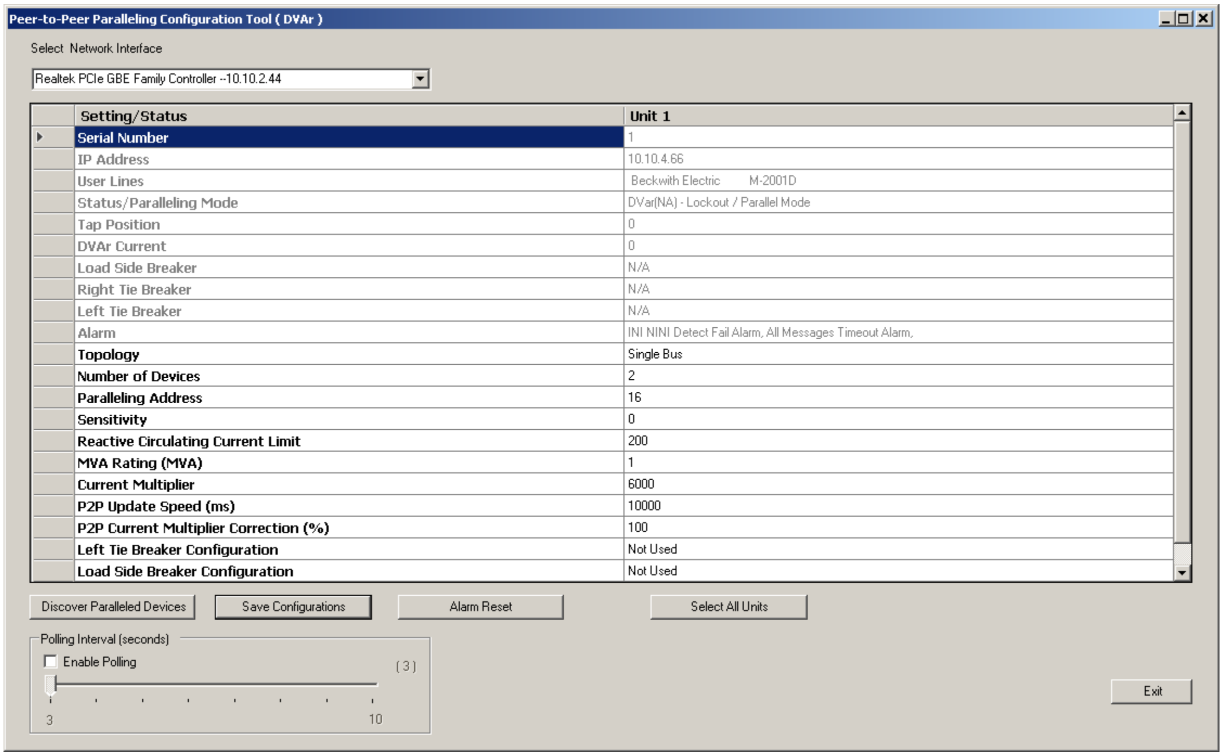

Select Network Interface

Realtek PCIe GBE Family Controller --10.10.2.44

Setting/Status	Unit 1
Serial Number	1
IP Address	10.10.4.66
User Lines	Beckwith Electric M-2001D
Status/Paralleling Mode	DVar(NA) - Lockout / Parallel Mode
Tap Position	0
DVAr Current	0
Load Side Breaker	N/A
Right Tie Breaker	N/A
Left Tie Breaker	N/A
Alarm	INI NINI Detect Fail Alarm, All Messages Timeout Alarm,
Topology	Single Bus
Number of Devices	2
Paralleling Address	16
Sensitivity	0
Reactive Circulating Current Limit	200
MVA Rating (MVA)	1
Current Multiplier	6000
P2P Update Speed (ms)	10000
P2P Current Multiplier Correction (%)	100
Left Tie Breaker Configuration	Not Used
Load Side Breaker Configuration	Not Used

Figure 18 Delta VAr Peer to Peer Paralleling Configuration Tool Dialog Screen

Discovered Paralleled Devices

Each discovered control and its data is displayed on the Delta VAr Peer to Peer Configuration Tool dialog screen. The data is organized into control identifiers, read only statuses, and configurable (writable) settings. The control read only statuses are indicated by the color "gray", and configurable settings are identified by Bold Type. N/A indicates the data is not applicable.

The Control Identifiers are:

- **Serial Number –** Serial Number of the device
- **IP Address –** IP address of the device
- **User Lines –** User Lines on the device

The Read Only Statuses are:

- **Status/Paralleling Mode –** Indicates whether the device is a DVAr Initiator (1), DVAr Non-Initiator (2), None, if the unit is in a Lockout condition, and if the unit is in Parallel, Independent or Disconnected Mode.
- **Tap Position –** Tap position of the device (if available)
- **DVAr Current**
- **Load Side Breaker –** Load Side Breaker status of the device
- **Right Tie Breaker –** Right Tie Breaker status of the device
- **Left Tie Breaker –** Left Tie Breaker status of the device
- **Alarms –** Any Paralleling Alarms that are active

By double-clicking on the parameter value, the Configuration Tool allows the user to enter the same settings as those in the main Configuration/Paralleling screen, as previously described:

- Topology
- Number of Devices
- Paralleling Address
- Sensitivity
- Reactive Circulating Current Limit
- MVA Rating
- Peer to Peer Update Speed
- Peer to Peer Current Multiplier Correction
- Load Side Breaker Configuration
- Right Tie Breaker Configuration
- Left Tie Breaker Configuration

For example, to change the Reactive Circulating Current value of a network control, double-click on the value in the control column. TapTalk will display the following popup screen. Follow the screen prompts to Save the value to the selected control(s).

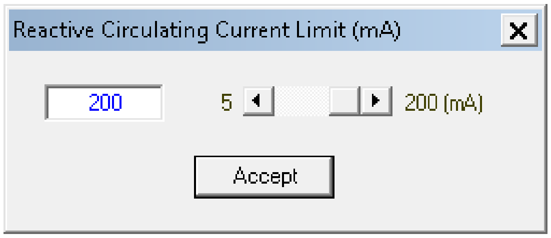

Reactive Circulating Current Limit (mA)

200

5 ... 200 (mA)

Figure 19 Peer to Peer DVAr Configuration Tool Settings Popup Screen Example

In addition to these settings, the tool allows the user to enter the following:

- Current Multiplier – The overall ratio of CT supplying the load current to the control, including the main CT and any auxiliary CTs. For example, if the main CT is 600 to 5 A with auxiliary CT of 5 to 0.2 A, then current multiplier is 600/0.2 = 3,000. (1 to 32600).
- Polling Interval – The Polling Interval of the Configuration Tool can be set from 3 to 10 seconds. When Enabled, the user must select "Discover Paralleled Devices" to start polling the controls.

The Configuration Tool also provides the means to Save Configurations and Reset Alarms.

DELTA VAR PEER TO PEER PARALLELING CONTROL SETUP FROM THE HMI

It is highly recommended to setup the Paralleling scheme using TapTalk. However, the controls may be setup from the HMI of each paralleled control.

> ■ **NOTE:** This procedure requires Level 2 Access.

1. Determine the number of controls in the Delta VAr Peer to Peer Paralleling scheme from the Control Network Map determined earlier in this section.
2. For the first Non-Initiator control to be setup, verify that all the appropriate Setup Settings other than the "Paralleling Type" setting have been entered for the control application.
3. Press the Down Arrow (CNFG Hot Button) pushbutton to wake the unit. The menu will advance to "CONFIGURATION".

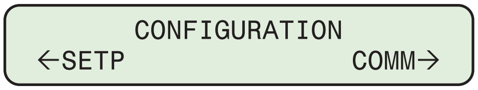

```
     CONFIGURATION
←SETP            COMM→
```

4. Press the Down Arrow pushbutton once. The unit will display the following:

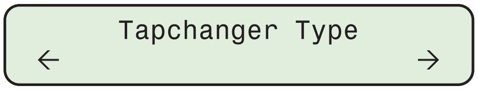

```
    Tapchanger Type
←                     →
```

5. Press the Right or Left arrow pushbutton, as necessary, to navigate to the "Paralleling" menu.

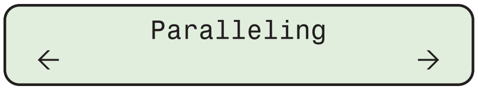

```
      Paralleling
←                     →
```

6. Press the Down arrow pushbutton once. The unit will display the following:

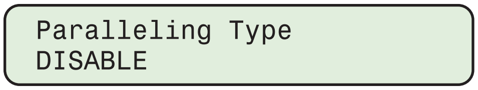

```
Paralleling Type
DISABLE
```

7. Press the **ENT** pushbutton. If prompted, enter a valid Level 2 Access Code. The following will be displayed:

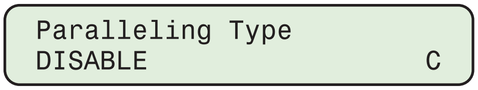

```
Paralleling Type
DISABLE              C
```

8. Utilizing the arrow pushbuttons, select the Paralleling Type "PEER2PEER DELTAVAR", then press the **ENT** pushbutton. The following will be displayed.

```
Paralleling Type
PEER2PEER DELTAVAR
```

9. Press the Down arrow pushbutton to navigate through the Paralleling setup screens:
   - P2P DVar Sensitivity
   - DVAR2 Reac I Lmt
   - Bus Topology
   - Paralleling Address*
   - Number of Devices
   - P2P Update Speed
   - Load Side Breaker Configuration
   - Right Tie Breaker Configuration
   - Left Tie Breaker Configuration
   - MVA Rating
   - I Multiplier Correction
   - Clear Lockout Alarm
   - MVA Rating Full Load
   - Primary L-L Rated Voltage
   - Go To Sympathy Manual in P2P

   *The Initiator Paralleling Address must be the highest address in the network. All Non-Initiator addresses must be a value less than the Initiator. The control's position in the paralleling network is determined by its paralleling address. As shown in Figure 9, Position 1 should be assigned a paralleling address of 1, Position 2 a paralleling address of 2 and so on, in an ascending order. In this example the Initiator control will be in Position 8 with a Paralleling Address of 8.

10. Repeat the Configuration Steps for the remaining controls. The control with the highest address (the Initiator) must be setup last.

▲ **CAUTION:** After placing the Initiator control in the Delta VAr Peer to Peer Paralleling scheme the controls will not respond to any tapchange requests for 30 seconds.

11. The Delta VAr Peer to Peer Paralleling scheme is now in effect.

    The proper operation of the Delta VAr Peer to Peer Paralleling scheme should be verified by performing the "Delta VAr Peer to Peer Paralleling Checkout Procedure".

DELTA VAR PEER TO PEER LOCKOUTS

The Delta VAr Peer to Peer Paralleling Mode includes the following lockouts:

- Initiator Lockout
- Non-Initiator Lockout
- Shared Lockout

Any lockout of the paralleling mode will initiate a Lockout alarm. When a lockout is active, the unit issuing the lockout will stop load voltage regulation. Also, the alarm can be configured as a DNP event, or as a report in the case of IEC 61850. The lockout alarm will be displayed on the control front panel HMI display and in the TapTalk "Monitor/Peer to Peer Alarm Messages" screen.

■ **NOTE:** The Programmable Alarm Relay (**TapTalk/Setup/Alarms**) must have "Peer To Peer Alarm" checked in order to enable the Paralleling Alarms messages on the front panel HMI.

Initiator Lockout

An Initiator Lockout will be in effect as long as an Initiator Lockout Alarm condition exists, as described previously. These lockouts will automatically clear when communication is restored, or they can be cleared by the user. Initiator Lockouts include the following:

- **Non-Initiator Detection Lockout –** This lockout will coincide with the Non-Initiator Detection Lockout Alarm.
- **Communication Loss Lockout –** This lockout will coincide with the Communication Loss Lockout Alarm.
- **Communication Link Fail Lockout –** This lockout will coincide with the Communication Link Fail Lockout Alarm.

Non-Initiator Lockout

A Non-Initiator Lockout will be in effect as long as a Non-Initiator Lockout Alarm condition exists, as described previously. These lockouts will automatically clear when communication is restored, or they can be cleared by the user. Non-Initiator Lockouts include the following:

- **Initiator Communication Loss Lockout –** This lockout will coincide with the Initiator Communication Loss Lockout Alarm.
- **Communication Loss Lockout –** This lockout will coincide with the Communication Loss Lockout Alarm.
- **Communication Link Fail Lockout –** This lockout will coincide with the Communication Link Fail Lockout Alarm.

Shared Lockouts

There are three lockouts that are shared between Initiator and Non-Initiator controls:

- **Tie Breaker Status Conflict Lockout –** The Tie Breaker Status Conflict Lockout activates when a control detects that its status for a tie breaker, shared with another control, disagrees with that unit's status for the same tie breaker. The Tie Breaker Status Conflict Lockout is only applicable in the "Single" and "Ring Bus" topology. This lockout will automatically be cleared when the breaker status conflict is no longer present, or it can be cleared by the user.

- **Delta VAr Limit Lockout –** The Delta VAr Limit Lockout actuates when the calculated Delta VAr value is greater than the configured Delta VAr limit. This lockout will automatically clear when the calculated Delta VAr current value is less than the limit (Circulating Current Limit Reactive setting minus 4 mA). The 4 mA is the hysteresis. The lockout can also be cleared by the user.
- **Sympathy Lockout –** The Sympathy Lockout actuates when a control detects that another control in the connected network has locked out due to a Tie Breaker Status Conflict Lockout or a Delta VAr Limit Lockout.

  The Sympathy Lockout will reset when the control with the Tie Breaker Status Conflict Lockout or Delta VAr Limit Lockout resets the lockout, or if cleared by the user. If the Sympathy Lockout was cleared by the user, the control will re-enter the lockout state if any GOOSE messages indicate that either the Tie Breaker Status Conflict Lockout or Delta VAr Limit Lockout state still exists.

Delta VAr Peer to Peer Lockout Alarm Messages

The Delta VAr Peer to Peer Paralleling Alarm Messages that are displayed on the control's HMI display can also be viewed remotely by selecting TapTalk "Monitor/Peer to Peer Alarm Messages" (Figure 20).

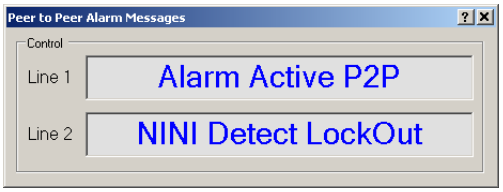

Line 1 Alarm Active P2P

Line 2 NINI Detect LockOut

Figure 20 TapTalk Monitor/Peer to Peer Alarm Messages Screen

Sympathy Lockout Alarm – actuates when a control detects that another control in the network has locked out due to a Tie Breaker Status Conflict Lockout or a Delta VAr Limit Lockout. The Sympathy Lockout/Alarm will reset when the control with the Tie Breaker Status Conflict Lockout or Delta VAr Limit Lockout resets the lockout, or if cleared by the user.

Initiator Communications Lockout Alarm – will actuate when an Non-Initiator fails to receive the expected messages for the duration of the P2P Update Speed setting time plus 1512 ms. The Non-Initiator will enter lockout, which effectively disables the Peer to Peer paralleling scheme. This lockout will automatically clear when communication is restored, or it can be cleared by the user.

Reactive Current Limit Lockout Alarm – actuates when the calculated Reactive Current value is greater than the configured Reactive Current limit. This lockout/alarm will automatically clear when the Delta VAr value is less than the limit minus 4 mA for hysteresis, or it can be cleared by the user.

Non-Initiator Detection Lockout Alarm – When the control powers up in Initiator Mode, or changes from a Non-Initiator to an Initiator, the control will wait for approximately two consecutive P2P Update Speed setting time plus 512 ms, to allow all the GOOSE messages from all the Non-Initiators in the network to reach the Initiator. Once all GOOSE messages have been received, the Initiator will start its normal measurement and calculation algorithm, as well as the measurement and calculation algorithm of the other controls in its network. If within that initial period of two consecutive P2P Update Speed setting time plus 512 ms, the Initiator does not receive all the GOOSE messages it expected, it will enter the Non-Initiator Lockout state. This lockout will automatically clear when communication is restored, or it can be cleared by the user.

Breaker Status Conflict Lockout Alarm – actuates when a control detects that its status for a tie breaker, shared with another control, disagrees with that unit's status for the same tie breaker. The Breaker Status Conflict Lockout alarm is only applicable in the "Single" and "Ring Bus" topology.

Message Response Time Lockout Alarm – actuates when a Non-Initiator or Initiator has not received all the expected GOOSE messages within the specified time period for three consecutive P2P Update Speed setting time periods.

Communication Link Fail Lockout Alarm – actuates when the ethernet cable is disconnected from the local control, or there is a hardware failure that affects communications. The local control will also display a message "P2P Comm Loss LO" followed by a screen that indicates the paralleling address of the control with communication loss. It will take 40 seconds before the paralleling address is displayed. If there is more than one paralleling address with no messages, the HMI will cycle to display each paralleling address. When the other controls in the paralleling system do not see communication from the affected control(s), they will also go to lockout and alarm, as defined in "Communication Loss Lockout Alarm".

Communication Loss Lockout Alarm – actuates when any condition exists that prevents another control from sending or receiving expected GOOSE messages, for example, the ethernet cable is disconnected or an incorrect CID file is sent. The Lockout/Alarm will actuate after three consecutive "P2P Update Speed" (1000-10000 ms) time settings have expired. The control will display "P2P Comm Loss LO" followed by a screen indicating the paralleling address of the control with communication loss. It will take 40 seconds before the paralleling address is displayed. If there is more than one paralleling address with no messages, the HMI will cycle to display each paralleling address. This lockout and alarm occurs regardless of the status of the tie or load breakers.

If tie breakers are open that isolate a control from the control with a Communication Link Fail Lockout, it will take 40 seconds for that control to go to lockout. During the 40 seconds, the isolated control will continue to regulate the bus voltage.

Clearing Delta VAr Peer to Peer Paralleling Lockout/Alarms from TapTalk

Delta VAr Peer to Peer Paralleling Lockout/Alarms can be cleared/reset in TapTalk in two places. Individual control Lockout/Alarms can be reset from the Setup/Alarms screen and also from the Peer to Peer Paralleling Configuration Tool. All or selected control Lockout/Alarms can be reset from the Peer to Peer Paralleling Configuration Tool.

To clear/reset Delta VAr Peer to Peer Paralleling Lockout/Alarms on an individual control from the TapTalk **Alarms Setup** screen:

1. Establish communications with the target control.
2. Select **Setup/Alarms** from the TapTalk toolbar. TapTalk will display the Alarms screen.
3. Select "Peer to Peer Lockout Reset" (Figure 21). TapTalk will display the "Command successfully sent to control" confirmation screen.

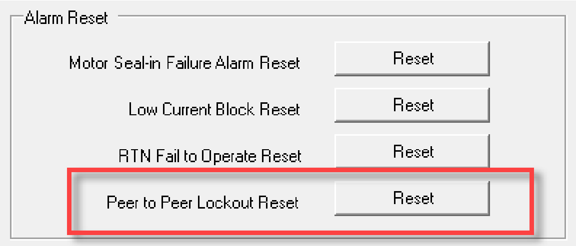

Figure 21 Peer to Peer Lockout Reset from Alarms Screen

To clear/reset Delta VAr Peer to Peer Paralleling Lockout/Alarms on an individual control or multiple controls from the TapTalk **Peer to Peer Configuration Tool**:

1. Establish Ethernet communications with the target control.
2. Select **Setup/P2P System Manager/DVAr Paralleling** from the TapTalk toolbar. TapTalk will display the Peer to Peer Paralleling Configuration Tool (DVAr) screen (Figure 22).
3. Select "Discover Paralleled Devices", the Configuration Tool screen will update and display the paralleled units.
4. Select the column header of the control(s) to be reset, then select "Alarm Reset". In the example shown in Figure 22, the Unit 1 column heading is selected, therefore, the Alarm Reset command will only reset Unit 1.
5. TapTalk will display the Alarm Reset confirmation screen, with the Unit Number and IP Address.
6. Select **OK**. TapTalk will display a confirmation screen.

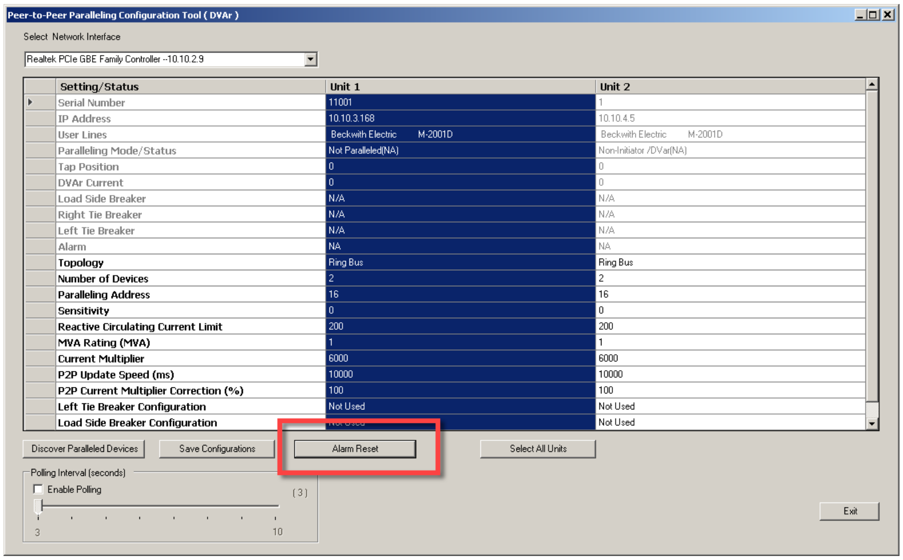

Realtek PCIe GBE Family Controller --10.10.2.9

Setting/Status	Unit 1	Unit 2
Serial Number	11001	1
IP Address	10.10.3.168	10.10.4.5
User Lines	Beckwith Electric M-2001D	Beckwith Electric M-2001D
Paralleling Mode/Status	Not Paralleled(NA)	Non-Initiator /DVar(NA)
Tap Position	0	0
DVAr Current	0	0
Load Side Breaker	N/A	N/A
Right Tie Breaker	N/A	N/A
Left Tie Breaker	N/A	N/A
Alarm	NA	NA
Topology	Ring Bus	Ring Bus
Number of Devices	2	2
Paralleling Address	16	16
Sensitivity	0	0
Reactive Circulating Current Limit	200	200
MVA Rating (MVA)	1	1
Current Multiplier	6000	6000
P2P Update Speed (ms)	10000	10000
P2P Current Multiplier Correction (%)	100	100
Left Tie Breaker Configuration	Not Used	Not Used
Load Side Breaker Configuration	Not Used	Not Used

Figure 22 Peer to Peer Paralleling Configuration Tool Alarm Reset Example

DELTA VAR PEER TO PEER PARALLELING CHECKOUT PROCEDURE

Two Transformer Verification

1. Verify that the individual controls to be included in the Peer to Peer configuration have been tested in the independent mode of operation.
2. Verify that Peer to Peer (P2P) DeltaVar has been configured in each control and they are ready to be tested.
3. Place all the transformers to be paralleled in Manual mode to keep them from responding to tap change requests.
4. Place all the transformers to be paralleled on the same tap position so that the regulated voltage is near the band center setting.
5. For this verification, assume that the following system conditions exist:
    a. All the transformers are the same.
    b. The high side sources are all connected together.
    c. There is only one high side source for the paralleled transformers.
6. If the high side sources are connected together, then verify that the DeltaVar current in all the transformers is near zero.
7. If the high side sources are not connected together, then it may be necessary to adjust the tap positions to obtain a zero DVAR current, or the minimum value possible. Record the difference in the tap positions, for example Transformer 1 may be two taps higher than Transformer 2.

   Tap Position Difference: ______________________________
8. Manually raise Transformer 1, one or two taps.
9. Manually lower Transformer 2, one or two taps, then observe the following:
    - The regulated voltage should still be in band near the center of the band width.
    - The DVAR current on Transformer 1 should be lagging
    - The DVAR current on Transformer 2 should be leading
    - The DVAR current on Transformers 1 and 2 should have the same magnitude
10. Verify that Transformer 1 is calling for a lower and Transformer 2 is calling for a raise.

11. If both transformers are not calling for a tap change operation, then manually increase the tap position difference between the transformers by raising Transformer 1, one tap and lowering Transformer 2 one tap until both controls are calling for the correct operation.

    This keeps the regulated voltage near the center of the band center setting and therefore any operations by the controls will be caused by the DVAR current.

12. Simultaneously place both transformers into Automatic operation and observe where the transformers stop initiating tap changes.

    The transformers should be on the same tap or one tap part, with the controls not calling for any operations. If the high side is not connected then the tap positions should be the same number of taps apart as noted above.

13. Place Transformer 1 and Transformer 2 in Manual.
14. Raise or Lower either Transformer 1 or Transformer 2 by one tap to generate some DVAR current.

    The transformer with the higher voltage (typically the higher tap) will have the lagging DVAR current and the other transformer will have the same magnitude but will indicate a leading DVAR current. If the load is not evenly distributed between the transformers, then the voltage on the transformer with the larger load may decrease and the control may call for a raise. The voltage on the transformer with the smaller load may increase and its control may call for a lower.

15. Open the Tie Breaker between Transformer 1 and Transformer 2 and verify that the controls are not calling for any tap change operations.

    The load current does not have to be the same when the Tie Breaker opens and the voltage may change based on the loading of the transformers.

16. Verify that the DVAR current is at or near zero.
17. If necessary, manually initiate tap change operations to bring the voltage back into band.
18. Manually place the transformers to the same tap position (or the same difference as noted above).
19. Close the Tie Breaker between Transformer 1 and Transformer 2 and verify that the DVAR current in all transformers is at or near zero.

    Assuming all the transformers are the same and the high side sources are all connected together, only one high side source for the paralleled transformers. If the high side is not connected together then may need to adjust the tap positions to get zero DVAR current or the minimum value possible.

20. Manually Lower Transformer 1, one or two taps.
21. Manually Raise Transformer 2, one or two taps.

    The regulated voltage should still be in band near the center of the band width.

22. Verify that the DVAR current on Transformer 1 is Leading and that the DVAR current on Transformer 2 is Lagging with the same magnitude.
23. Raise or Lower either Transformer 1 or Transformer 2 so they are one tap apart to generate some DVAR current.

    The transformer with the higher voltage (typically the higher tap) will have the Lagging DVAR current and the other transformer will have the same magnitude but will Leading DVAR current.

■ **NOTE:** Since Transformer 2 will be supplying all the load, its voltage may decrease. Transformer 1 voltage may increase since it has no load (if its PT is between the breaker and the transformer).

24. Open the Low Side Breaker for Transformer 1 and verify that the controls are not calling for any tap change operations.

    The load current on Transformer 2 should be doubled and Transformer 1 load should be at or near zero.

25. Verify that the DVAR current is at or near zero.
26. If necessary, manually initiate tap change operations to bring the voltage back into band.
27. Manually place the transformers to the same tap position (or the same difference as noted above).

28. Close the Low Side Breaker for Transformer 1 and verify that the DVAR current in all the transformers is at or near zero.
29. Raise or Lower either Transformer 1 or Transformer 2 by one tap to generate some DVAR current.

    The transformer with the higher voltage (typically the higher tap) will have the Lagging DVAR current and the other transformer will have the same magnitude but will Leading DVAR current. Since Transformer 1 will be supplying all the load, its voltage may decrease. Transformer 2 voltage may increase since it has no load (if its PT is between the breaker and the transformer).

30. Open the Low Side Breaker for Transformer 2 and verify that the controls are not calling for any tap change operations.

    The load current on Transformer 1 should be doubled and Transformer 2 load should be zero.

31. Verify that the DVAR current is at or near zero.
32. If necessary, manually initiate tap change operations to bring the voltage back into band.
33. Manually place the transformers to the same tap position (or the same difference as noted above).
34. Close the Low Side Breaker for Transformer 2 and verify the DVAR current in all the transformers is at or near zero.

—Test complete—

Place the desired settings on the controls and set all controls to Automatic.

Three Transformer Verification

1. Verify that the individual controls to be included in the Peer to Peer configuration have been tested in the independent mode of operation.
2. Verify that Peer to Peer (P2P) DeltaVar has been configured in each control and they are ready to be tested.
3. Place all the transformers to be paralleled in Manual mode to keep them from responding to tap change requests.
4. Place all the transformers to be paralleled on the same tap position so that the regulated voltage is near the band center setting.
5. For this verification, assume that the following system conditions exist:
    - All the transformers are the same.
    - The high side sources are all connected together.
    - There is only one high side source for the paralleled transformers.
6. If the high side sources are connected together, then verify that the DeltaVar current in all the transformers is near zero.
7. If the high side sources are not connected together, then it may be necessary to adjust the tap positions to obtain a zero DVAR current, or the minimum value possible. Record the difference in the tap positions, for example Transformer 1 may be two taps higher than Transformer 2 with Transformer 3 one tap lower than Transformer 2.

    Tap Position Difference: ______________________________

8. Manually raise Transformer 1, one or two taps.
9. Manually lower Transformer 2 and 3, one or two taps, then observe the following:
    - The regulated voltage should still be in band near the center of the band width.
    - The DVAR current on Transformer 1 should lagging
    - The DVAR current on Transformers 2 and 3 should be leading
    - The DVAR current on Transformer 1 will have twice the magnitude of Transformers 2 and 3
    - The DVAR current on Transformers 2 and 3 should both have the same magnitude
10. Verify that Transformer 1 is calling for a lower and Transformers 2 and 3 are calling for a raise.

11. If all transformers are not calling for a tap change operation, then manually increase the tap position difference between the transformers by raising Transformer 1, one tap and lowering Transformers 2 and 3 one tap until all controls are calling for the correct operation.

    This keeps the regulated voltage near the center of the band center setting and therefore any operations by the controls will be caused by the DVAR current.

12. Simultaneously place all transformers into Automatic operation and observe where the transformers stop initiating tap changes.

    The transformers should be on the same tap or one tap part, with the controls not calling for any operations. If the high side is not connected then the tap positions should be the same number of taps apart as noted above.

13. Place Transformers 1, 2 and 3 in Manual.
14. Raise Transformer 1, one tap to generate some DVAR current.

    The transformer with the high voltage (typically the higher tap) will have the lagging DVAR current and the other two transformers will have the same magnitude but will indicate a leading DVAR current.

■ **NOTE:** If the load is not evenly distributed between the transformers, then the voltage on the transformer with the larger load may decrease and the control may call for a raise. The voltage on the transformer with the smaller load may increase and its control may call for a lower.

15. Open the Tie Breaker between Transformer 1 and Transformer 2 with Transformer 3 still connected to Transformer 2.
16. Verify that the controls are not calling for any tap change operations.

    The load current does not have to be the same when the Tie Breaker opens and the voltage may change based on the loading of the transformers.

17. Verify that Transformer 1 DVAR current is at or near zero.
18. If necessary, manually initiate tap change operations to bring the voltage back into band.
19. Verify that Transformer 2 and 3 DVAR current is at or near zero (because they are on the same tap position).
20. Raise Transformer 2, one tap and verify the following:
    - DVAR current on Transformer 2 is lagging
    - Transformers 3 DVAR current is leading
    - The magnitude of the DVAR Current on Transformer 2 and 3 should be the same
    - Transformer 1 DVAR current should be at or near zero
21. Manually place all transformers to the same tap position (or the same difference as noted above).
22. Close the Tie Breaker between Transformer 1 and Transformer 2 and verify that the DVAR current in all transformers is at or near zero.

    Assuming all the transformers are the same tap and the high side sources are all connected together, only one high side source for the paralleled transformers. If the high side is not connected together then may need to adjust the tap positions to get zero DVAR current or the minimum value possible.

23. Manually Lower Transformer 3, one or two taps.
24. Manually Raise Transformers 1 and 2, one or two taps.

    The regulated voltage should still be in band near the center of the band width.

25. Verify the following:
    - The DVAR current on Transformer 3 is Leading
    - The DVAR current on Transformers 1 and 2 is Lagging
    - The DVAR current on Transformer 3 will have twice the magnitude of Transformers 1 and 2
    - The DVAR current on Transformers 1 and 2 should have the same magnitude

If the load is not evenly distributed between the transformers, then the voltage on the transformer with the larger load may decrease and the control may call for a raise. The voltage on the transformer with the smaller load may increase and its control may call for a lower.

26. Open the Tie Breaker between Transformer 2 and Transformer 3 with Transformer 1 still connected to Transformer 2.
27. Verify that the controls are not calling for any tap change operations.

    The load current does not have to be the same when the Tie Breaker opens and the voltage may change based on the loading of the transformers.

28. Verify that Transformer 3 DVAR current is at or near zero.
29. If necessary, manually initiate tap change operations to bring the voltage back into band.
30. Verify that Transformer 1 and 2 DVAR current is at or near zero (because they are on the same tap position).
31. Raise Transformer 2, one tap and verify the following:
    - DVAR current on Transformer 2 is lagging
    - Transformers 1 DVAR current is leading
    - The magnitude of the DVAR Current on Transformer 1 and 2 should be the same
    - Transformer 3 DVAR current should be at or near zero
32. Manually place the transformers to the same tap position (or the same difference as noted above).
33. Close the Tie Breaker between Transformer 2 and Transformer 3
34. Verify that the DVAR current in all the transformers is at or near zero.

    Assuming all the transformers are the same and the high side sources are all connected together, only one high side source for the paralleled transformers. If the high side is not connected together then it may be necessary to adjust the tap positions to achieve zero DVAR current or the minimum value possible.

35. Manually Lower Transformer 1, one or two taps.
36. Manually Raise Transformers 2 and 3, one or two taps.

    The regulated voltage should still be in band near the center of the band width.

37. Verify the following:
    - The DVAR current on Transformer 1 is Leading
    - The DVAR current on Transformers 2 and 3 is Lagging
    - The DVAR current on Transformer 1 will have twice the magnitude of Transformers 2 and 3, and they should both have the same magnitude.
    - The DVAR current on Transformers 2 and 3 should have the same magnitude.

    Since Transformers 2 and 3 will be supplying all the load, their voltage may decrease. Transformer 1 voltage may increase since it has no load (if its PT is between the breaker and the transformer).

38. Open the Low Side Breaker for Transformer 1 and verify that the controls are not calling for any tap change operations.

    The load current on Transformers 2 and 3 should have changed from one third to one half and Transformer 1 load should be at or near zero.

39. Verify that the DVAR current on Transformer 1 is at or near zero.
40. If necessary, manually initiate tap change operations to bring the voltage back into band.
41. Manually raise Transformer 2, one tap.
42. Verify the following:
    - The DVAR current on Transformer 2 is lagging
    - The DVAR current on Transformer 3 is leading
    - The DVAR current on Transformers 2 and 3 have the same magnitude
    - The DVAR current on Transformer 1 should be at or near zero

43. Manually place the transformers to the same tap position (or the same difference as noted above).
44. Close the Low Side Breaker for Transformer 1 and verify that the DVAR current in all the transformers is at or near zero.

    Assuming all the transformers are the same and the high side sources are all connected together, only one high side source for the paralleled transformers. If the high side is not connected together then it may be necessary to adjust the tap positions to achieve zero DVAR current or the minimum value possible.

45. Manually Lower Transformer 2, one or two taps.
46. Manually Raise Transformers 1 and 3, one or two taps.

    The regulated voltage should still be in band near the center of the band width.

47. Verify the following:
    - The DVAR current on Transformer 2 is leading
    - The DVAR current on Transformers 1 and 3 is lagging
    - The DVAR current on Transformer 2 will have twice the magnitude of Transformers 1 and 3
    - The DVAR current on Transformers 1 and 3 should have the same magnitude

    Since Transformers 1 and 3 will be supplying all the load, their voltage may decrease. Transformer 2 voltage may increase since it has no load (if its PT is between the breaker and the transformer).

48. Open the Low Side Breaker for Transformer 2 and verify that the controls are not calling for any tap change operations.

    The load current on Transformers 1 and 3 should have changed from one third to one half and Transformer 2 load should be at or near zero.

49. Verify that the DVAR current on Transformer 2 is at or near zero.
50. If necessary, manually initiate tap change operations to bring the voltage back into band.
51. Manually raise Transformer 1, one tap.
52. Verify the following:
    - The DVAR current on Transformer 1 is lagging
    - The DVAR current on Transformer 3 is leading
    - The DVAR current on Transformers 1 and 3 have the same magnitude
    - The DVAR current on Transformer 2 should be at or near zero

53. Manually place the transformers to the same tap position (or the same difference as noted above).
54. Close the Low Side Breaker for Transformer 2 and verify that the DVAR current in all the transformers is at or near zero.

    Assuming all the transformers are the same and the high side sources are all connected together, only one high side source for the paralleled transformers. If the high side is not connected together then it may be necessary to adjust the tap positions to achieve zero DVAR current or the minimum value possible.

55. Manually Lower Transformer 3, one or two taps.
56. Manually Raise Transformers 1 and 2, one or two taps.

    The regulated voltage should still be in band near the center of the band width.

57. Verify the following:
    - The DVAR current on Transformer 3 is leading
    - The DVAR current on Transformers 1 and 2 is lagging
    - The DVAR current on Transformer 3 will have twice the magnitude of Transformers 1 and 2
    - The DVAR current on Transformers 1 and 2 should have the same magnitude

    Since Transformers 1 and 2 will be supplying all the load, their voltage may decrease. Transformer 3 voltage may increase since it has no load (if its PT is between the breaker and the transformer).

58. Open the Low Side Breaker for Transformer 3 and verify that the controls are not calling for any tap change operations.

    The load current on Transformers 1 and 2 should have changed from one third to one half and Transformer 3 load should be at or near zero.

59. Verify that the DVAR current on Transformer 3 is at or near zero.
60. If necessary, manually initiate tap change operations to bring the voltage back into band.
61. Manually raise Transformer 1, one tap.
62. Verify the following:
    - The DVAR current on Transformer 1 is lagging
    - The DVAR current on Transformer 2 is leading
    - The DVAR current on Transformers 1 and 2 have the same magnitude
    - The DVAR current on Transformer 3 should be at or near zero
63. Manually place the transformers to the same tap position (or the same difference as noted above).
64. Close the Low Side Breaker for Transformer 3 and verify that the DVAR current in all the transformers is at or near zero.

    Assuming all the transformers are the same and the high side sources are all connected together, only one high side source for the paralleled transformers. If the high side is not connected together then it may be necessary to adjust the tap positions to achieve zero DVAR current or the minimum value possible.

—Test complete—

Place the desired settings on the controls and set all controls to Automatic.

5.0 Master/Follower Peer-to-Peer Paralleling

The M-2001D also provides the option for Master/Follower Peer-to-Peer Ethernet based paralleling. This is an update on a classic paralleling method that is based on the concept that identical transformers (Figure 23), driven from a common source, and maintained on the same tap will operate in an optimal manner in parallel. The successful implementation of this method requires that the controls always have reliable tap position information and are always capable of accurately exchanging that tap information between all the paralleled controls. Should this information exchange become unreliable, it is necessary to alarm and ultimately revert to independent operation to preserve the safe operation of the transformers.

▲ **CAUTION:** All M-2001D controls in the Master/Follower Peer to Peer Paralleling scheme must have the **same Firmware version** installed for proper operation.

Advantages:

1. Replaces complex cam contact, relay, or electronic control logic used in other Master/Follower schemes with direct communication of Tap Position using a simple communications link.
2. Replaces Current Loop Wiring between controls in Circulating Current and Delta VAr 1 schemes with a simple communications link.
3. Automatically recognizes bus configuration changes and adapts accordingly.
4. Does not require use of CTs to measure current for paralleling purposes.
5. Does not require M-0115A and M-0127A external paralleling devices.

Limitations:

1. Requires use of matched transformers (any mismatch reduces efficiency).
2. Transformers must be supplied from a common Source.
3. Requires use of similar tapchanger mechanisms (# of Taps & Volts/Tap).
4. Requires each control to have Positive Tap Position Knowledge.

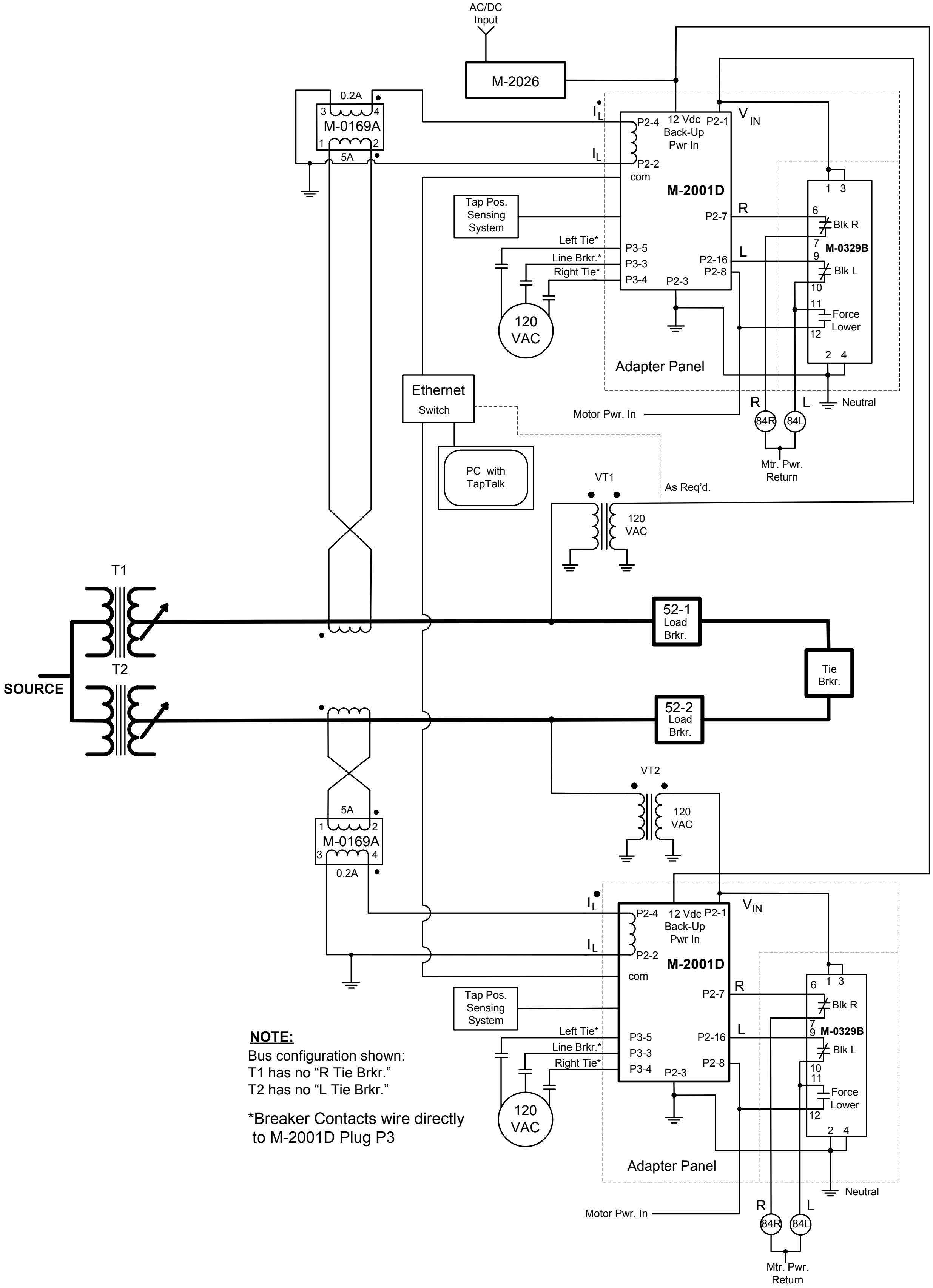

NOTE:
Bus configuration shown:
T1 has no “R Tie Brkr.”
T2 has no “L Tie Brkr.”

*Breaker Contacts wire directly to M-2001D Plug P3

Figure 23 Master/Follower Peer to Peer Paralleling (Two Transformers)

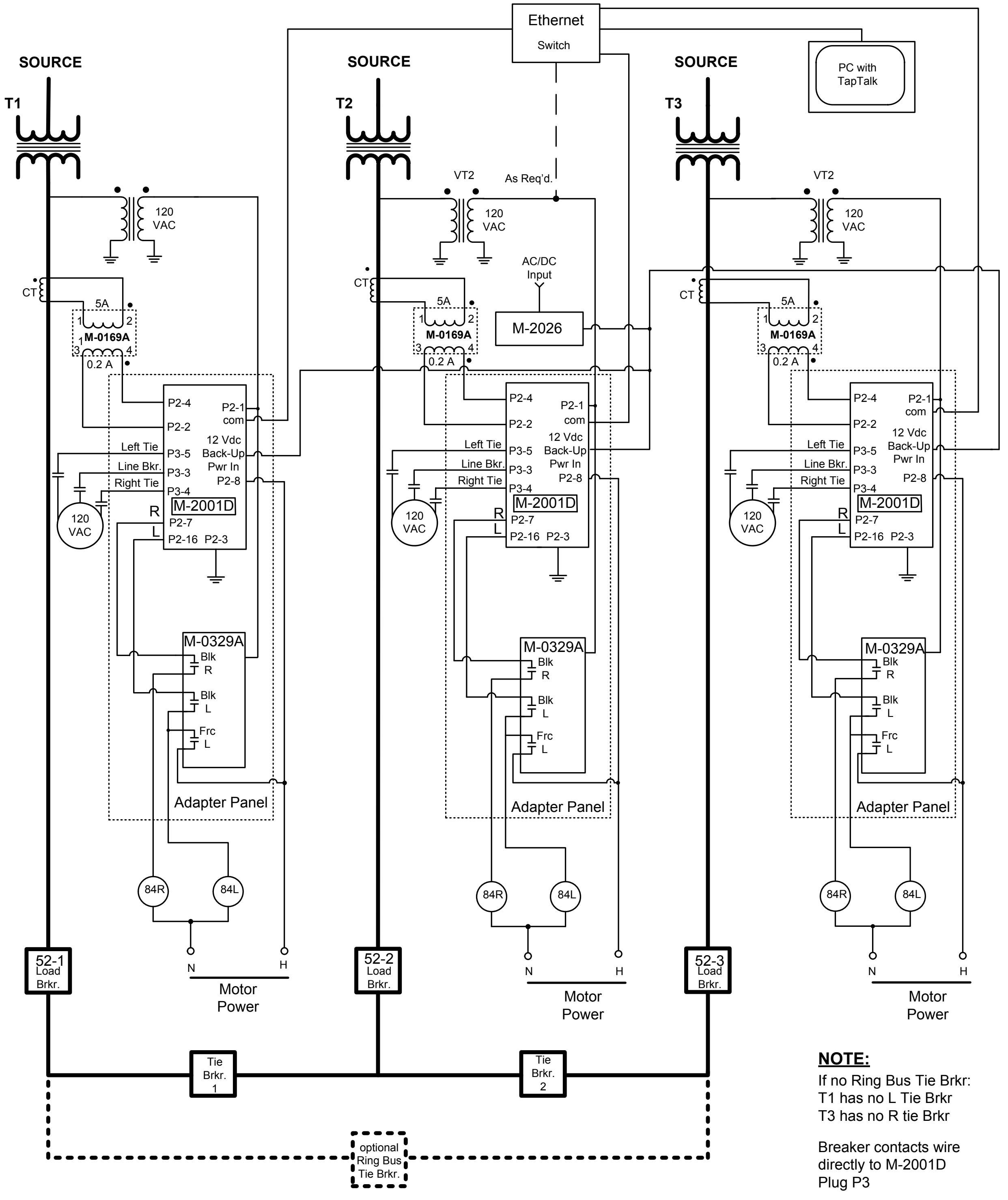

NOTE:

If no Ring Bus Tie Brkr:
T1 has no L Tie Brkr
T3 has no R tie Brkr

Breaker contacts wire
directly to M-2001D
Plug P3

Figure 24 Master/Follower Peer to Peer Paralleling (Three Transformers)

Master/Follower Peer to Peer Paralleling Application

The Master/Follower Paralleling scheme employs the GOOSE messaging of the IEC 61850 protocol to provide peer to peer communications. The control can be placed in either the Master or Follower mode to achieve paralleling. The Master/Follower settings can be changed individually on each control through TapTalk Setup/Configuration/Paralleling (Figure 26). The TapTalk Master/Follower Configuration Tool (Figure 28) allows the settings for all controls in the network for the Master/Follower paralleling scheme.

Grouping Operation Algorithm (GOA)

This GOA determines the action that is taken by the control when it detects any OPEN Tie Breakers (Figure 25) in the network. Each control individually monitors the status of the Tie Breakers (A2, A3 Auxiliary Inputs) and broadcasts these statuses to all the other controls via a GOOSE message. Each control in turn processes the tie breaker statuses to produce a map of the network every 64 ms. Each control upon detecting a change in any Breaker Status or Tap Position will issue a GOOSE message to update all the other controls in the network with the new information.

The following rules are applied to produce the Control Network Map (refer to Figure 25):

- The Master in the initial setup of the network should always be at the highest position in the network map (e.g. position 8).
- The paralleling address of each control should be the same as the position it is located in the network map (e.g. position 7 = address 7).
- All GOOSE messages are sorted according to their corresponding paralleling addresses.
- The control scans all the tie breakers statuses (if any) in the left positions to find the left most boundary.
- The first OPEN status indicates the boundary has been reached. Similarly the control scans all the right tiebreaker statuses (if any) to find the right most boundary. Once the boundaries are located the sub network is defined.
- If the control is a Master, the control will determine how many Followers are in its network.
- If the control is a Follower, the Master/Follower Identification will be equal to the address of the Master in that network.

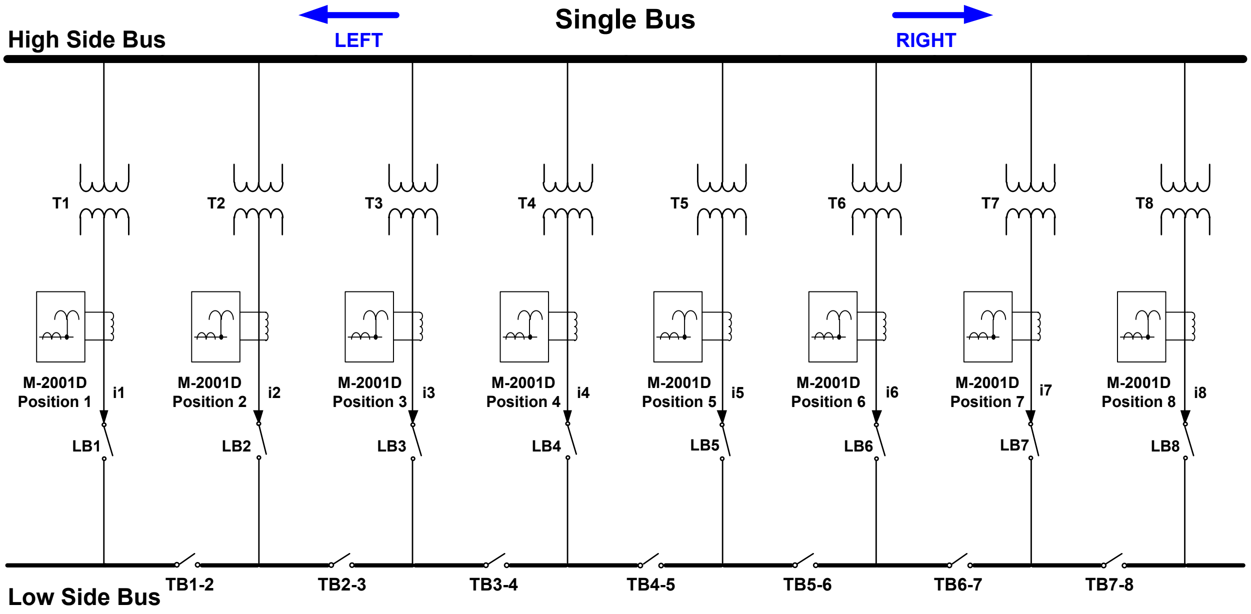

Figure 25 Breaker/Control Network Map

MASTER AND FOLLOWER CONTROL SETUP FROM TAPTALK

TapTalk Setup/Configuration/Paralleling

The Master/Follower settings for each control are available in the TapTalk **Setup/Configuration** screen (Figure 26). TapTalk also includes the **P2P System Manager** in the Configuration menu with dropdown selections for DVAr Paralleling and Master/Follower Paralleling Configuration Tools.

A minimum of 2 controls are required for the paralleling scheme to work. The Master unit configuration settings will be described first, and then the Follower(s) configuration settings.

■ **NOTE:** This procedure requires communication to be established with the target control (Master or Follower) with Level 2 Access.

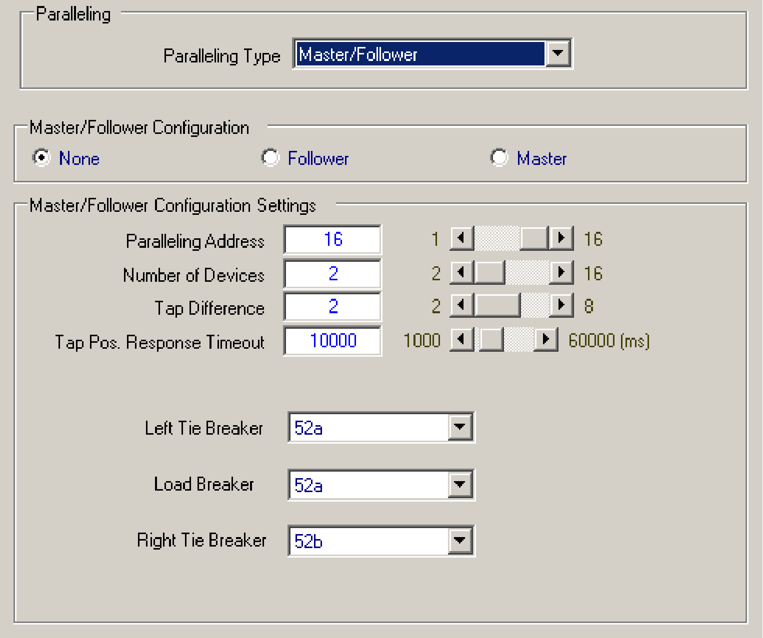

Paralleling

Paralleling Type: Master/Follower

Master/Follower Configuration

● None ○ Follower ○ Master

Master/Follower Configuration Settings

Paralleling Address: 16 (1 – 16)

Number of Devices: 2 (2 – 16)

Tap Difference: 2 (2 – 8)

Tap Pos. Response Timeout: 10000 (1000 – 60000 (ms))

Left Tie Breaker: 52a

Load Breaker: 52a

Right Tie Breaker: 52b

Figure 26 Master/Follower Paralleling Settings (Configuration Screen)

Master Control Setup from TapTalk

1. Verify that all the appropriate control settings other than the "Paralleling Type" have been entered for the control application.
2. Place the Master Control to be setup in Manual by selecting **Block** from the Remote Control screen (Figure 27) "Remote Operation/Block Auto Control via Communication (Comm Block)" section.

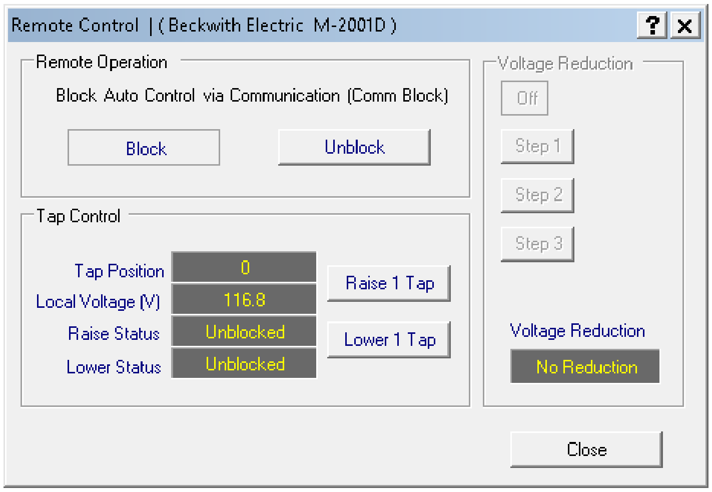

Remote Control | (Beckwith Electric M-2001D)

Remote Operation

Block Auto Control via Communication (Comm Block)

Tap Control

Tap Position: 0

Local Voltage (V): 116.8

Raise Status: Unblocked

Lower Status: Unblocked

Voltage Reduction: No Reduction

Figure 27 Remote Control Screen – Comm Block

3. Select Paralleling Type to "Master/Follower" in the Paralleling section of the Configuration screen.
4. Select "**None**" for the Master/Follower Configuration. The control will not be assigned as a Master until all controls in the Paralleling scheme have been configured.
5. Enter the desired Master Configuration Settings:
   - Paralleling Address (1 to 16) – The Master Paralleling Address must be the highest address in the network. All Follower addresses must be a value less than the Master.

     The control's position in the paralleling network is determined by its paralleling address. As shown in Figure 25, Position 1 should be assigned a paralleling address of 1, Position 2 a paralleling address of 2 and so on, in an ascending order. In this example the Master control will be in Position 8 with a Paralleling Address of 8.
   - Number of Devices (2 to 16)
   - Tap Difference (2 to 8)
   - Tap Position Response Timeout (1000 to 60000 ms) – the time within which the Followers have to be at the same tap position as that of the Master.

     If the Tap Position Response Timeout is greater than the Intertap Delay setting, then the Tap Position Response Timeout is used as the Intertap Delay, so that the Master waits for all the Followers to make a tapchange before the Master takes the next tap.
   - Left Tie Breaker – Not Used, 52a, 52b
   - Load Breaker – Not Used, 52a, 52b
   - Right Tie Breaker – Not Used, 52a, 52b

Follower Control Setup from TapTalk

■ **NOTE:** Followers are in Remote Manual mode and operate in "Pulse Mode" regardless of the mode of operation of the Raise/Lower Output contacts.

1. Verify that all the appropriate control settings other than the "Paralleling Type" have been entered for the control application.
2. Verify that the designated network Master Control operational mode is as follows:
   - The control is in "**Manual**".
   - The "Master/Follower Configuration" is selected as "**None**". The Master control will not be assigned as a Master until all controls in the Paralleling scheme have been configured.
3. Select Paralleling Type to "Master/Follower" from the Paralleling section of the Configuration screen.
4. Select "Follower" for the Master/Follower Configuration.
5. Enter the desired Follower Configuration Settings as described in the Master Control Setup:
   - Paralleling Address
   - Number of Devices
   - Tap Difference
   - Tap Position Response Timeout
   - Left Tie Breaker
   - Load Breaker
   - Right Tie Breaker
6. Drive the Follower Tap Position to match the Master Tap Position.
7. Repeat Steps 3 through 6 for each Follower in the Master/Follower scheme.
8. Determine the Master Band Status, then proceed as follows:
   - **If the Master Band Status is "In-Band":**
     a. Select "Master" in the Master/Follower Configuration section.

▲ **CAUTION:** After placing the Master control in "Master", the control will not respond to any tapchange requests for 32 seconds.

     b. When at least 32 seconds have elapsed, initiate a Raise or Lower tapchange from the Master, Remote Control screen (Figure 27).
     c. Verify that all Followers initiate tapchanges to match the Master tap position.
     d. If necessary, return the Master to an "In-Band" tap position.
     e. Select **Unblock** from the Master, Remote Control screen (Figure 27).

- **If the Master Band Status is not In-Band:**
  - a. Adjust the Master tap position by initiating a tapchange as necessary to bring the Master Band Status "In-Band" from the Master, Remote Control screen (Figure 27).
  - b. Drive each Follower tap position in the Master/Follower scheme to match the Master tap position.
  - c. Select "Master" in the Master/Follower Configuration section.

> ▲ **CAUTION:** After placing the Master control in "Master", the Master will not respond to any tapchange requests for 32 seconds.

  - d. When at least 32 seconds have elapsed, initiate a Raise or Lower tapchange from the Master, Remote Control screen (Figure 27).
  - e. Verify that all Followers initiate tapchanges to match the Master tap position.
  - f. If necessary, return the Master to an "In-Band" tap position.
  - g. Select **Unblock** from the Master, Remote Control screen (Figure 27).

9. The Master/Follower Paralleling scheme is now in effect.

TapTalk P2P System Manager – Master/Follower Configuration Tool

TapTalk includes a Master/Follower Configuration Tool located in the **Setup/P2P System Manager** menu (Figure 28) to help configure the controls for the Master/Follower Paralleling scheme. The tool allows the user to discover on a Local Area Network (LAN) all the Beckwith M-2001D controls that have the Master/Follower feature. Note that the Master/Follower Paralleling scheme can only be implemented on controls that are on the same network. In addition, if a multiple network adapter exists on the host computer the configuration tool will allow the user to select on which network card the tool should perform the discover of all M-2001D controls. Failure to choose the correct network card may result in the tool not discovering all the available M-2001D controls.

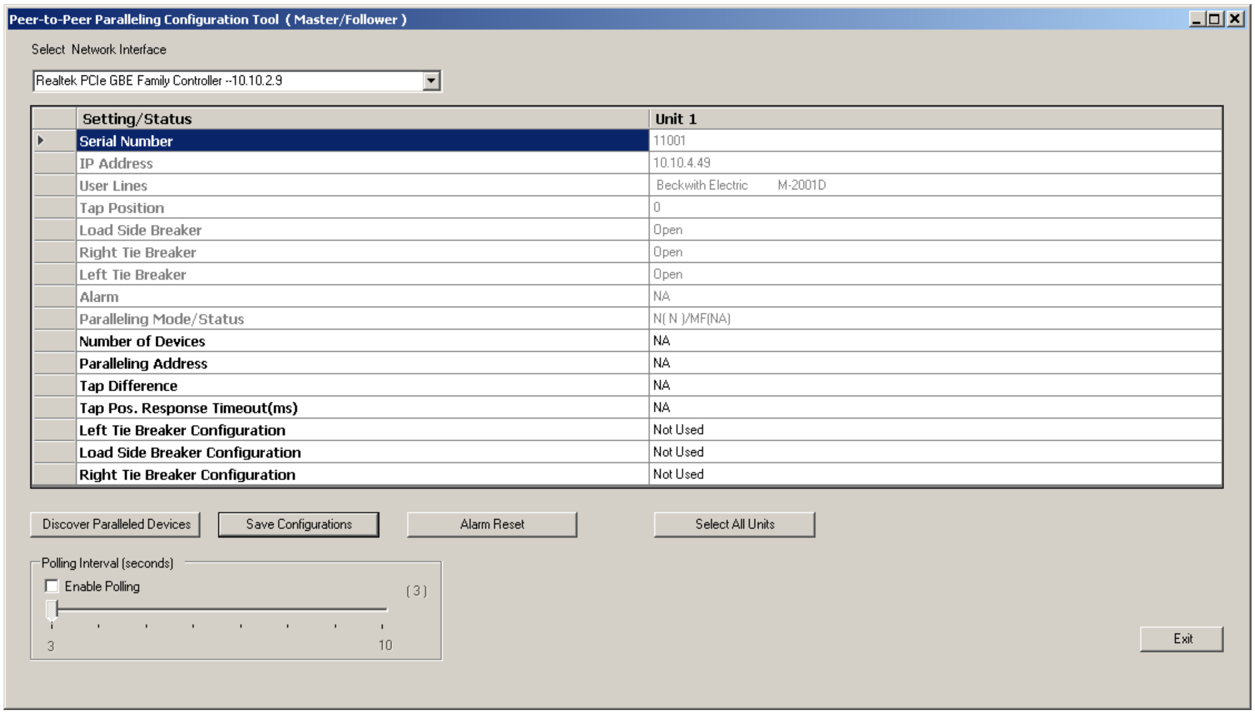

Select Network Interface

Realtek PCIe GBE Family Controller --10.10.2.9

☐ Enable Polling (3)

Setting/Status	Unit 1
Serial Number	11001
IP Address	10.10.4.49
User Lines	Beckwith Electric M-2001D
Tap Position	0
Load Side Breaker	Open
Right Tie Breaker	Open
Left Tie Breaker	Open
Alarm	NA
Paralleling Mode/Status	N(N)/MF(NA)
Number of Devices	NA
Paralleling Address	NA
Tap Difference	NA
Tap Pos. Response Timeout(ms)	NA
Left Tie Breaker Configuration	Not Used
Load Side Breaker Configuration	Not Used
Right Tie Breaker Configuration	Not Used

Figure 28 Master/Follower Configuration Tool Screen

Discovered Devices

Each discovered control and its data is displayed on the Master/Follower Configuration Tool screen. The data is organized into control identifiers, read only statuses, and configurable (writable) settings. NA indicates the data is not applicable.

The Control Identifiers are:

- **Serial Number –** Serial Number of the device
- **IP Address –** IP address of the device
- **User Lines –** User Lines on the device

The Read Only Statuses are:

- **Tap Position –** Tap position of the device
- **Load Side Breaker –** Load Side Breaker status of the device
- **Right Tie Breaker –** Right Tie Breaker status of the device
- **Left Tie Breaker –** Left Tie Breaker status of the device
- **Alarms –** Any Paralleling Alarms that are active
- **Paralleling Mode/Status –** Indicates whether the device is a Master, Follower or None, and if the unit is in Lockout condition.

The Master/Follower Configuration Tool settings in **BOLD** type may be edited by double-clicking on the corresponding parameter. The configurable settings are:

- Number of Devices
- Paralleling Address
- Tap Difference
- Tap Pos. Response Timeout
- Left Tie Breaker Configuration
- Load Side Breaker Configuration
- Right Tie Breaker Configuration

MASTER AND FOLLOWER CONTROL SETUP FROM THE HMI

It is highly recommended to setup the Paralleling scheme using TapTalk. However, the controls may be setup from the HMI of each paralleled control.

■ **NOTE:** This procedure requires Level 2 Access.

Master Control Setup from the HMI

1. For the Master control to be setup, verify that all the appropriate Setup Settings other than the "Paralleling Type" have been entered for the control application.
2. Place the Master Control to be setup in Manual.
3. Press the Down Arrow (CNFG Hot Button) pushbutton to wake the unit. The menu will advance to "CONFIGURATION".

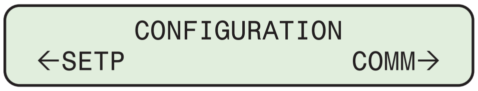

4. Press the Down Arrow pushbutton once. The unit will display the following:

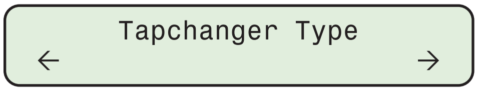

5. Press the Right or Left arrow pushbutton, as necessary, to navigate to the "Paralleling" menu.

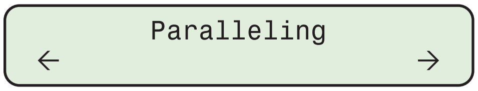

6. Press the Down arrow pushbutton, as necessary, until the "Paralleling Type" screen is displayed. Select the Paralleling Type "MASTER/FOLLOWER", then press the **ENT** pushbutton.

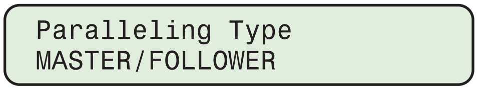

```
Paralleling Type
MASTER/FOLLOWER
```

7. Press the Down arrow pushbutton once, the "Master/Follower" configuration screen will be displayed.

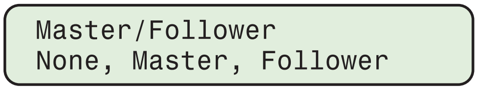

```
Master/Follower
None, Master, Follower
```

8. Verify that the Master/Follower Configuration is selected to "**NONE**". The control will not be assigned as a Master until all controls in the Paralleling scheme have been configured.
9. Press the Down arrow pushbutton to navigate through the Master setup screens:
   - Paralleling Address
   - Number of Devices
   - Tap Position Response Timeout
   - Breaker Options
   - Tap Difference

Follower Control Setup from HMI

■ **NOTE:** This procedure requires Level 2 Access.

1. For the Follower control to be setup, verify that all the appropriate Setup Settings other than the "Paralleling Type" have been entered for the control application.
2. Verify that the designated network **Master Control** operational mode is as follows:
   - The control is in "Manual"
   - The "Master/Follower Configuration" is selected as "None".

   If the designated network Master Control is not in the operational mode described above, then take the necessary steps to place the control in the correct mode before continuing.
3. Navigate to the Configuration "Paralleling" menu.

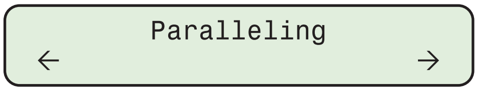

```
       Paralleling
←                    →
```

4. Press the Down arrow pushbutton, until the "Paralleling Type" screen is displayed. Select the Paralleling Type "MASTER/FOLLOWER", then press the **ENT** pushbutton.

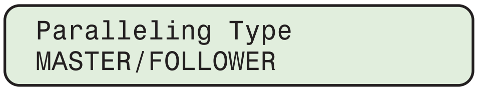

```
Paralleling Type
MASTER/FOLLOWER
```

5. Press the Down arrow pushbutton once, the "Master/Follower" configuration screen will be displayed.

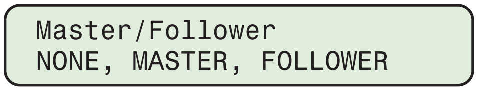

```
Master/Follower
NONE, MASTER, FOLLOWER
```

6. Set the control to "FOLLOWER", then press the **ENT** pushbutton.

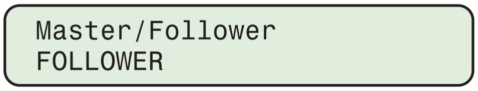

```
Master/Follower
FOLLOWER
```

7. Press the Down arrow pushbutton to navigate through the FOLLOWER setup screens:
   - Paralleling Address
   - Number of Devices
   - Tap Position Response Timeout
   - Breaker Options
   - Tap Difference

8. Drive the Follower Tap Position to match the Master Tap Position.
9. Repeat this procedure for each Follower in the Master/Follower scheme.
10. Determine the **Master** Band Status by navigating the **Master HMI** menu to "**Monitor/Status**":
    a. Press the Down arrow pushbutton to navigate to the "Tapchanger Status" screen.

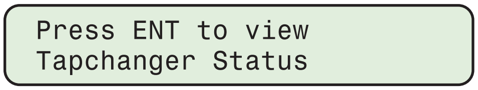

```
Press ENT to view
Tapchanger Status
```

    b. Press the **ENT** pushbutton. The control will display a summary of the Tapchanger Status parameters:

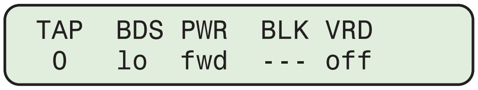

```
TAP  BDS PWR  BLK VRD
 0   lo  fwd  --- off
```

BDS = Band Status "lo, hi, ok"

    c. **If the Master Band Status is not In-Band:**
        – Adjust the Master tap position by initiating a tapchange as necessary to bring the Master Band Status In-Band.
        – Drive each Follower tap position in the Master/Follower scheme to match the Master tap position.

11. With the Master Band Status **In-Band "ok"**, proceed as follows:
12. From the **Master Control** HMI, navigate to the "Master/Follower" configuration screen.

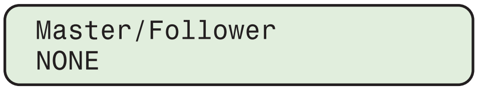

```
Master/Follower
NONE
```

13. Set the Master control to **MASTER**, then press the **ENT** pushbutton.

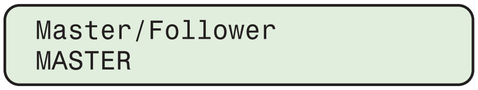

```
Master/Follower
MASTER
```

▲ **CAUTION:** After placing the Master control in "Master", the control will not respond to any tapchange requests for 32 seconds.

14. When at least 32 seconds have elapsed, initiate a Raise or Lower tapchange.
15. Verify that all Followers initiate tapchanges to match the Master tap position.
16. Place the Master Control in **Automatic** and verify Automatic operation.
17. The Master/Follower Paralleling scheme is now in effect.

MASTER/FOLLOWER LOCKOUTS AND ALARMS

Lockout Condition

Any lockout of the paralleling mode will initiate a Lockout alarm. There are two types of lockout conditions, Master Lockout and Follower Lockout. When a lockout is active, the unit issuing the lockout will stop any further GOOSE publishing and will stop load voltage regulation. Also, the alarm can be configured as a DNP event, or as a report in the case of IEC 61850. The lockout alarm will be displayed on the control front panel HMI display and in the TapTalk Monitor/Master/Follower Alarm Messages screen.

■ **NOTE:** The Programmable Alarm Relay (**TapTalk/Setup/Alarms**) must have "Peer To Peer Alarm" checked in order to enable the Paralleling Alarms messages on the front panel HMI.

Master Lockout

There are four Master Lockouts:

- **GOOSE Message Delay –** When the control powers up in Master Mode, the control will wait for approximately 65 sec to allow all the GOOSE messages from all the Followers in the network to reach the Master. Once all GOOSE messages have been received, the Master will start its normal algorithm. If within that initial 65 second period the Master does not receive all the GOOSE messages it expected, it will enter the Master lockout state.
- **Tap Position Response Timeout Lockout –** The Tap Position Response Timeout will start after the Master has published its new tap position message after it has performed a successful tap operation. If it doesn't receive the tap position messages from all the participating Followers in the network before the timer expires, then a Master Lockout is issued.
- **Tap Difference Lockout –** If the Tap position difference between any Follower and the Master is greater than or equal to Tap Difference setting, the Master will enter the lockout state.
- **Follower Communication Loss Lockout –** If any follower does not send a valid re-transmitted GOOSE message within a 65 sec internal Follower Detection Lockout "Keep Alive" time, then a lockout is issued, signaling a broken communication link.

Follower Lockout

There are three types of Follower Lockout:

- **Master Communication Loss Lockout –** When the Follower does not receive a valid re-transmitted GOOSE message from the Master within a 65 second internal "Keep Alive" time, and the previous Master GOOSE message indicates that the breaker statuses were closed, then a Follower Lockout is activated. This Lockout is an indication that communication with the Master has been lost.
- **Follower Communication Loss Lockout –** If any follower does not send a valid re-transmitted GOOSE message within a 65 sec internal Keep Alive time, then a lockout is activated, indicating a broken communication link.
- **Tap Difference Lockout –** If the Tap Position Difference between the Follower and the Master is greater than or equal to the Tap Difference setting, a Follower Lockout will be activated.

Master/Follower Alarm Messages

The Master/Follower Alarm Messages that are displayed on the control's HMI display can also be viewed remotely by selecting TapTalk "Monitor/Master/Follower Alarm Messages" (Figure 29). In addition to the lockout conditions, the screen also displays the serial number of the Follower that caused the lockout condition for Tap Difference Lockout.

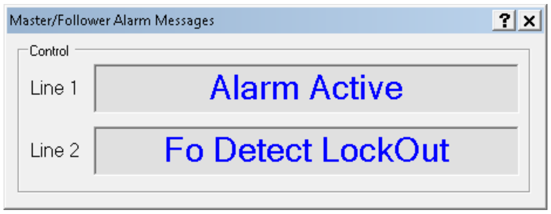

Line 1 Alarm Active

Line 2 Fo Detect LockOut

Figure 29 TapTalk Monitor/Master/Follower Alarm Messages Screen

Clearing Master/Follower Paralleling Lockout/Alarms from TapTalk

Master/Follower Paralleling Lockout/Alarms can be cleared/reset in TapTalk in two places. Individual control Lockout/Alarms can be reset from the Setup/Alarms screen and also from the Master/Follower Paralleling Configuration Tool. All or selected control Lockout/Alarms can be reset from the Master/Follower Paralleling Configuration Tool.

To clear/reset Master/Follower Paralleling Lockout/Alarms on an individual control from the TapTalk **Alarms Setup** screen:

1. Establish communications with the target control.
2. Select **Setup/Alarms** from the TapTalk toolbar. TapTalk will display the Alarms screen.
3. Select "Master/Follower Lockout Reset" (Figure 30). TapTalk will display the "Command successfully sent to control" confirmation screen.

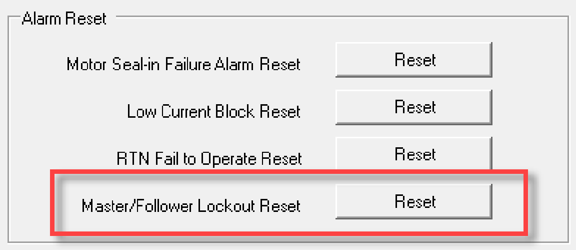

Figure 30 Peer to Peer Lockout Reset from Alarms Screen

To clear/reset Master/Follower Paralleling Lockout/Alarms on an individual control or multiple controls from the TapTalk **Master/Follower Configuration Tool**:

1. Establish Ethernet communications with the target control.
2. Select **Setup/P2P System Manager/Master/Follower Paralleling** from the TapTalk toolbar. TapTalk will display the Peer to Peer Paralleling Configuration Tool (Master/Follower) screen.
3. Select "Discover Paralleled Devices", the Configuration Tool screen will update and display the paralleled units.
4. Select the column header of the control(s) to be reset, then select "Alarm Reset". For example, when the Unit 1 column heading is selected, the Alarm Reset command will only reset Unit 1.
5. TapTalk will display the Alarm Reset confirmation screen, with the Unit Number and IP Address.
6. Select **OK**. TapTalk will display a confirmation screen.

MASTER/FOLLOWER REMAIN IN BLOCK AUTOMATIC

The Master/Follower "Remain in Block Automatic" setting causes the Master and Follower controls to never perform any automatic operations in any condition. When this setting is enabled, the controls must always be operated through the serial Remote Raise and Lower commands. The Remain in Block Automatic setting can only be enabled in the the M-2001D front panel HMI. Typically, this will be set one time and rarely changed.

■ **NOTE:** This setting is not available in TapTalk.

Independent Mode Operation

When the Remain in Block Automatic setting is **ENABLED**, and the paralleling status changes to Independent Mode, due to a change in the Tie Breaker status (or any breaker status), the Master Control will be placed into **Block Automatic** mode and will not perform any automatic operations. The Follower Control will switch from the standard Master/Follower "Comm Blk" mode to **Block Automatic** mode and will not perform any automatic operations. While in Independent Mode with Block Automatic, the M-2001D controls must be operated individually, using the M-2001D Remote Raise and Lower commands.

Parallel Mode Operation

When the Master/Follower paralleling scheme switches from Independent Mode to Parallel Mode, due to a change in the Tie Breaker status, the Master Control will remain in **Block Automatic** mode and will not perform any automatic operations, while the Follower Control will **switch** from Block Automatic to Master/ Follower **Comm Blk** mode. The Master Control must be operated using the M-2001D Remote Raise and Lower commands, and the Follower Control will then follow the tap position of the Master Control.

Remain in Block Automatic Status Indicators

The TapTalk Metering & Status screen will display the Operation Mode as "Block Auto", and the Block Status as "Comm Blk" for the Master and Follower controls, whether they are in either Parallel or Independent Mode. In addition, the M-2001D front panel MANUAL LED will be illuminated on the controls.

Remain in Block Automatic – Operation at Power Up

When the "Remain in Block Automatic" setting is ENABLED, and the controls are in **Independent Mode** when power is cycled, the controls will power up in Block Automatic mode. The controls will not perform any automatic operations. The controls must be operated individually, using the M-2001D Remote Raise and Lower commands.

When the Remain in Block Automatic setting is ENABLED, and the controls are in **Parallel Mode** when power is cycled, the controls will determine which is the Master Control, and the Master Control goes into Block Automatic mode, and the Follower Control is placed into Master/Follower **Comm Blk** mode. The Master will not perform any automatic operations and must be operated using the M-2001D Remote Raise and Lower commands.

6.0 Classic Paralleling

CIRCULATING CURRENT PARALLELING

Circulating current paralleling was originally developed using analog transformer controls. It is an active paralleling method, in that it continually strives to minimize circulating current between paralleled transformers. It utilizes 0.2 Ampere current loops in hard-wired CT balancing circuits to bias transformer operating bandcenters to optimally share loads between transformers (See Figure 31). It has several advantages over other possible paralleling implementations:

Advantages:

1. It minimizes circulating current between paralleled devices.
2. Tap position knowledge is not required by the control for operation.
3. Properly adjusts LDC in Parallel and Independent Modes.
4. It can tolerate small differences in size and impedance of paralleled transformers.

Limitations:

1. Transformers must be supplied from a single source.
2. Unable to parallel transformers with different MVA and impedance ratings without custom ratio correcting current transformers.
3. Current loop wiring between units lends itself to increased likelihood of wiring errors.

DELTA VAR1 PARALLELING

Delta VAr1 paralleling, (available in the M-2001C Base-T and Comprehensive, and the M-2001D), utilizes the same wiring configuration as the circulating current method (See Figure 32). It is an algorithm in the digital control's programming that makes sure that no in-phase component of the load current is used in calculating the transformer bias voltages to keep the paralleling transformers running efficiently. Such in-phase current results from paralleling transformers with different internal impedance or from driving the transformers from different voltage primary sources (open primary tie breakers).

If the paralleling situation under consideration has either of those characteristics, Delta VAr paralleling is definitely recommended. Because Delta VAr1 is an optional mathematical algorithm in our digital controls, it can be implemented without changing the existing circulating current wiring.

The result of in-phase current in the circulating current path is that a bias voltage between the two transformer's operating points is created, which cannot be resolved by the paralleling system and the transformers operate a number of taps apart, resulting in unnecessary circulating current.

Advantages:

1. Proportions VAr current between paralleled devices.
2. Properly adjusts LDC in Parallel and Independent Modes.
3. Able to parallel dissimilar transformers i.e. MVA and/or impedance differences.
4. Allows transformers to be driven from separate sources.
5. Eliminates paralleling bias error from in-phase currents from mismatches.
6. Tap position knowledge is not required by the control for operation.

Limitations:

1. Requires external paralleling device, M-0115A for each transformer.
2. Recommend use of M-0127A overcurrent relays for each transformer.
3. Unable to parallel transformers with different MVA and impedance ratings without custom ratio correcting current transformers.
4. Current loop wiring between units lends itself to increased likelihood of wiring errors.

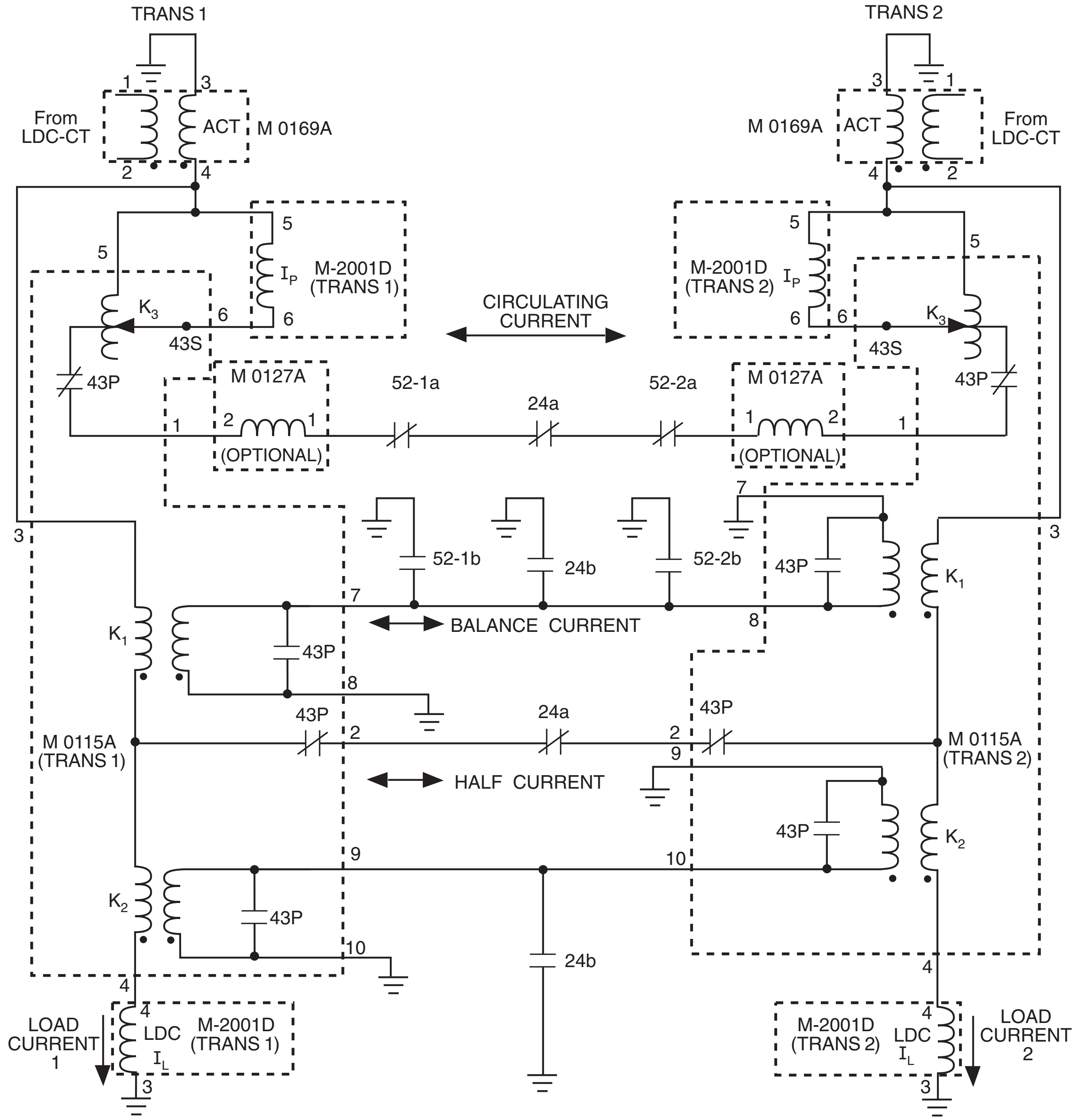

■ NOTES: This schematic is also applicable to the M-2001C Comprehensive Control.
52 and 24 contacts are shown in the breaker closed position; 43P in the parallel position.
K3 is a circulating current sensitivity control.
M-0127A is a current relay to detect excessive circulating current.

Figure 31 Simplified Schematic of Current Circuit for M-2001D Paralleling Two Transformers using the Circulating Current Method

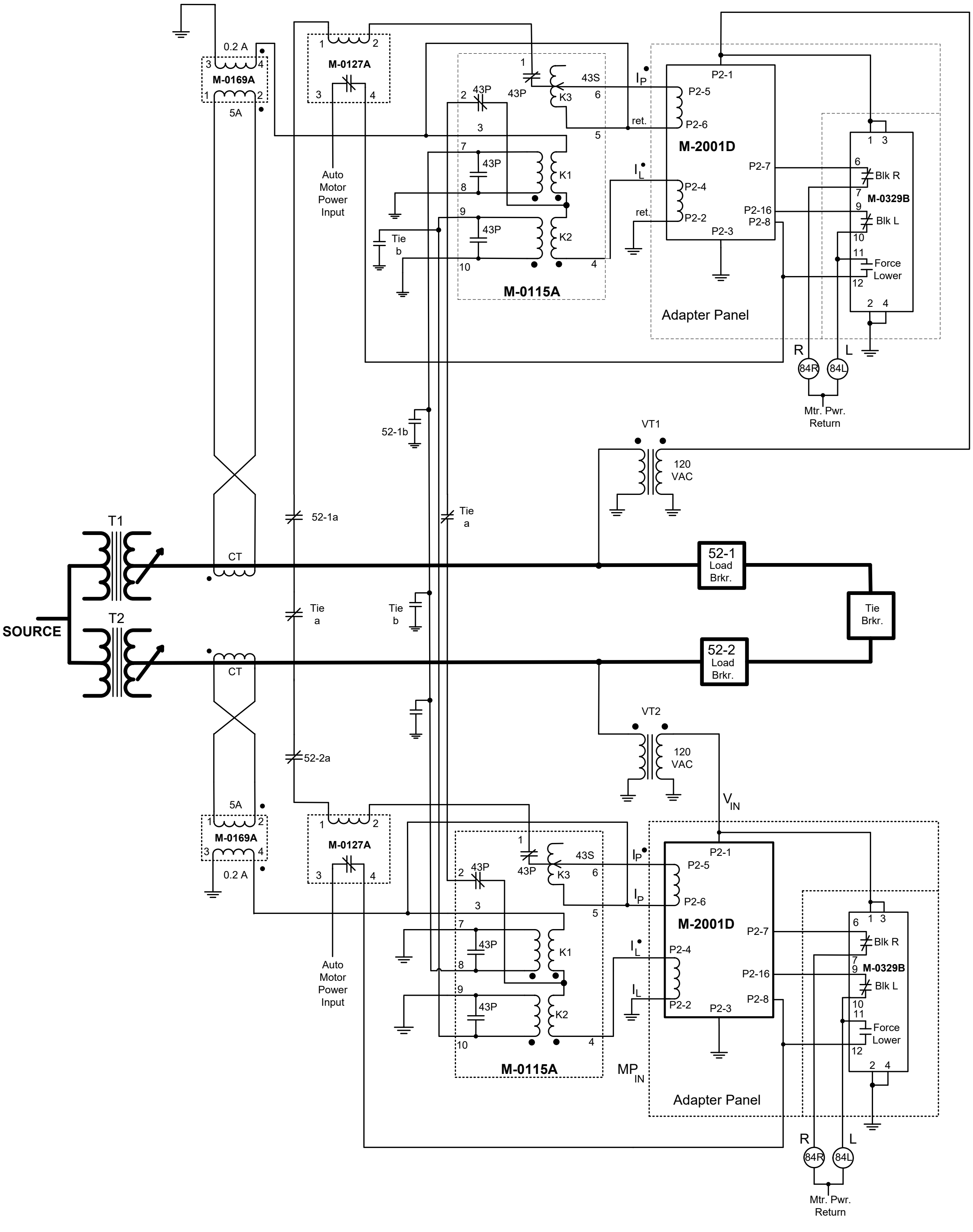

Figure 32 Paralleling Scheme for Two Transformers Using Circulating Current or Delta VAr1

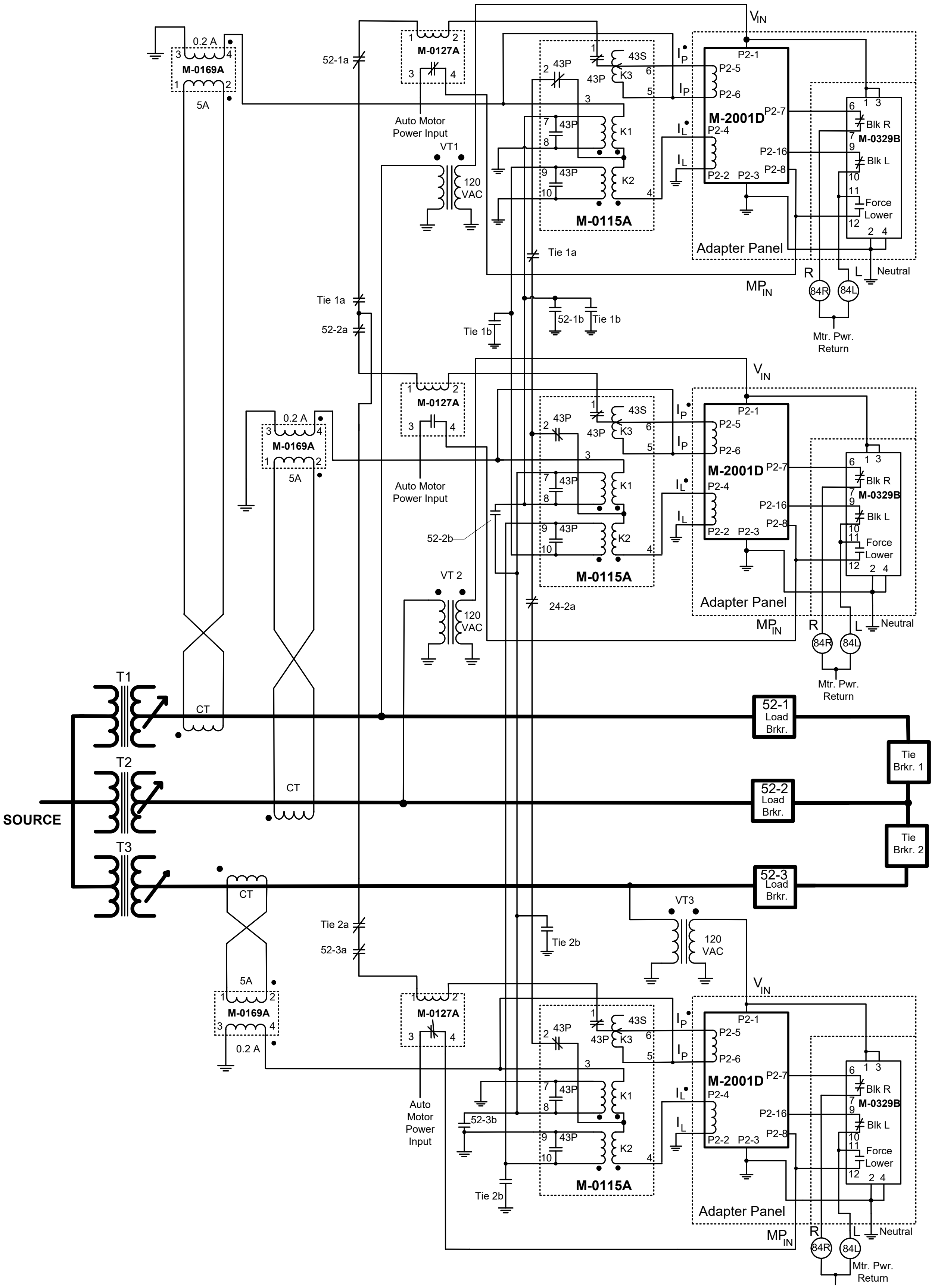

Figure 33 Paralleling Scheme for Three Transformers Using Circulating Current or Delta VAr1

Control Connections For Circulating Current or Delta VAr1 Paralleling

Control Connector P2	Function	Adapter Panels															
		M-2067B as M-0067E	M-2270B General Purpose	M-2280B GE-LTC	M-2339 AC UJ,IJ,MJ	M-2278 Siemens	M-2131B AVE-GEC	M-2174B Moloney	M-2279D PA 550	M-2379 PA 110/550	M-2354C PA 550	M-2220 MR MK20	M-2230 MR MK30	M-2286 West MS/ TM	M-2326 West. SJS	M-2324C PA. Reg	M-2347 UJ-1 Reg
P2-1	**Voltage Polarity**	TB1-1	TB1-10	TB3-1	TB4-3	TB3-3	TB1-1	TB3-1	TB3-10	TB4-72	TB1-10	TB1-1	TB1-1	Connect through existing "MS" & "TM" Round Multi-Pin Connectors	TB1-10	TB1-10	TB1-10
P2-2	**Line Current Return**	TB1-2	TB1-15	TB3-2	TB4-5*	TB3-5	TB1-4**	TB3-2	TB3-CT1	TB4-153	TB1-15	TB1-5	TB1-5		M-0169-1*	TB1-15	TB1-15
P2-3	**Voltage Return (Neutral)**	TB1-3	TB1-8	TB3-5	TB4-6	TB3-6	TB1-3	TB3-3	TB3-G	TB4-153	TB1-8	TB1-2	TB1-2		TB3-E10	TB1-8	TB1-8
P2-4	**Line Current Polarity**	TB1-4	TB1-14	TB3-3	TB4-4*	TB3-4	TB1-5**	TB3-4	TB3-CT2	TB4-258	TB1-14	TB1-10	TB1-10		M-0169-2*	TB1-14	TB1-14
P2-5	**Circulating Current Polarity**	TB1-6	TB1-4	TB3-9	TB4-2	TB3-2	TB1-6	TB3-6	TB3-287	TB4-187	TB1-4	TB1-11	TB1-11		TB1-4	TB1-4	TB1-4
P2-6	**Circulating Current Return**	TB1-5	TB1-3	TB3-8	TB4-1	TB3-1	TB1-7	TB5-5	TB3-285	TB4-185	TB1-3	TB1-12	TB1-12		TB1-3	TB1-3	TB1-3
P2-7	**RAISE Output**	TB1-7	TB1-5	TB3-6	TB4-10	TB3-10	TB1-10	TB3-7	TB3-25	TB4-63	TB1-5	TB1-18	TB1-18		TB3-E18	TB1-5	TB1-5
P2-8	**Motor Power Input**	TB1-8	TB1-9	TB3-4	TB4-9	TB3-9	TB1-9	TB3-8	TB3-52	TB4-71	TB1-9	TB1-19	TB1-19		TB3-E10	TB1-9	TB1-9
P2-16	**LOWER Output**	TB1-9	TB1-6	TB3-7	TB4-11	TB3-11	TB1-11	TB3-9	TB3-23	TB4-64	TB1-6	TB1-15	TB1-15		TB3-E15	TB1-6	TB1-6

* = 5 Amp Input, ** = 1 Amp Input

Table 4 Adapter Panel/Control Connections For Circulating Current or Delta VAr1 Paralleling

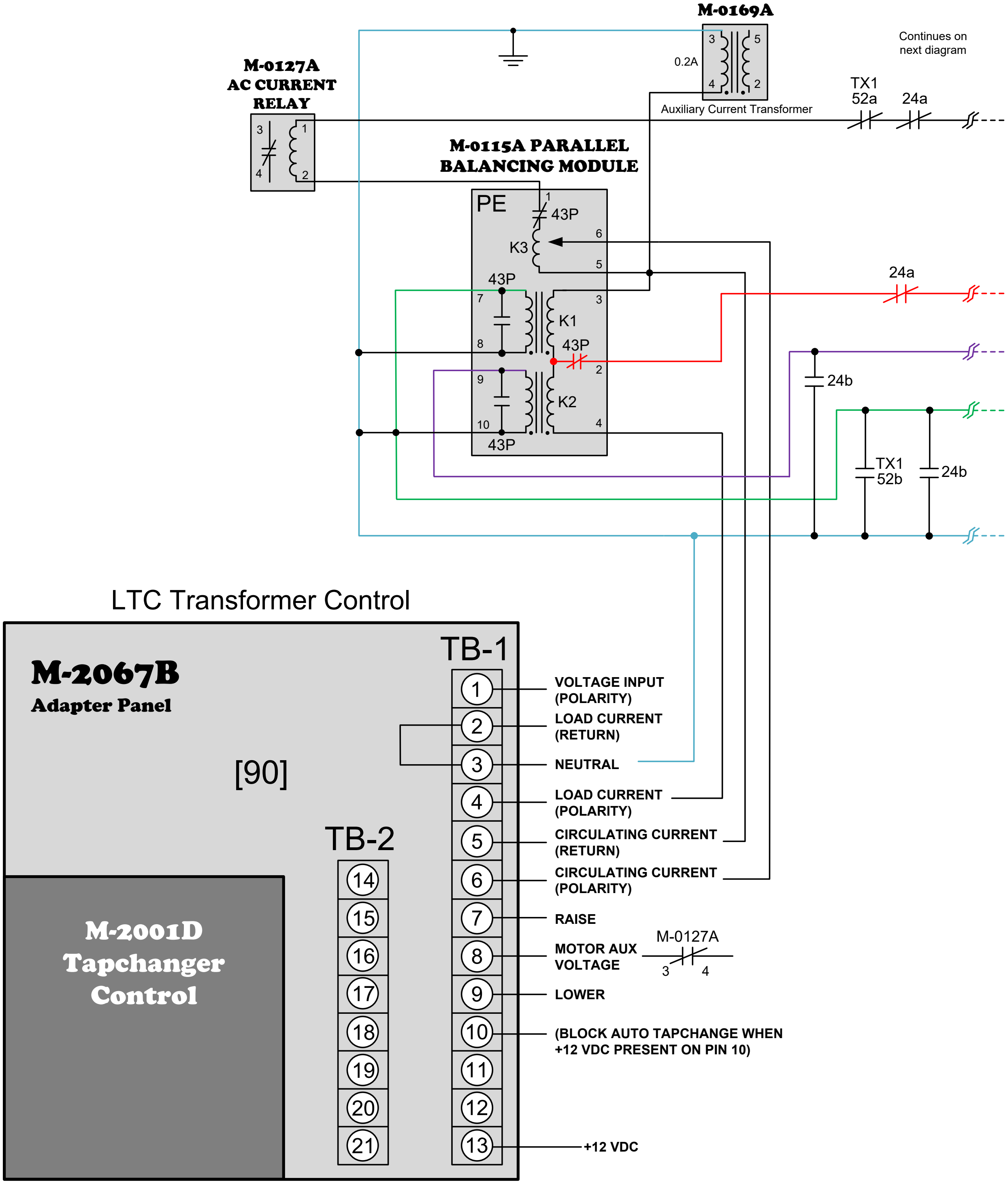

■ **NOTE:** All "a" contacts are shown N.C. (⊣/⊢) because they are CLOSED when the breakers are closed and in parallel. All "b" contacts are shown as N.O. (⊣⊢) because they are OPENED when the breakers are closed and in parallel.

Figure 34 Circulating Current Paralleling – Transformer 1 Typical Connection Diagram with M-2067B Adapter Panel

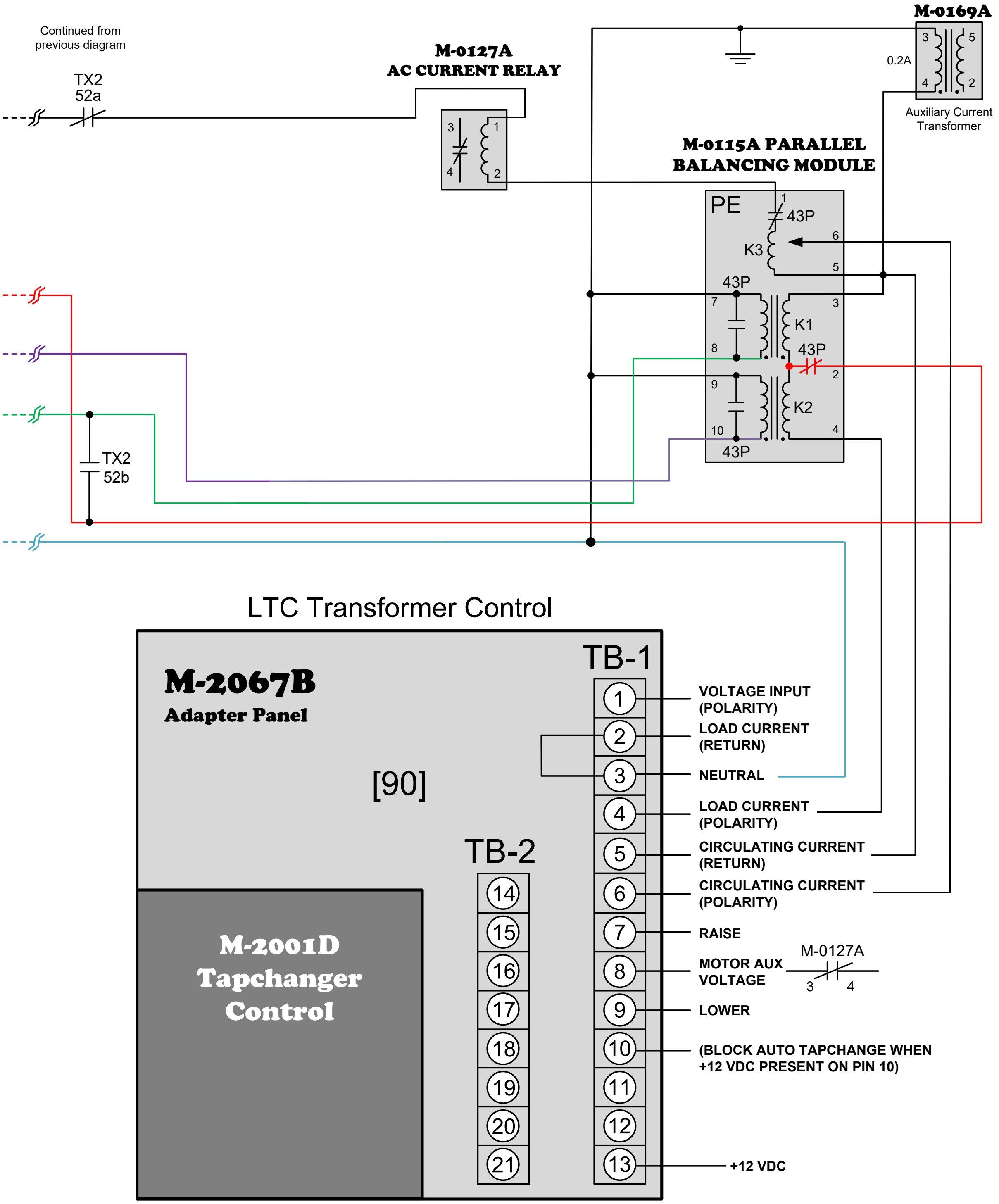

Figure 35 Circulating Current Paralleling – Transformer 2 Typical Connection Diagram with M-2067B Adapter Panel

CIRCULATING CURRENT AND DELTA VAR1 CONFIGURATION

Paralleling by the Circulating Current method or the Delta VAr1 method involves a configuration in which each M-2001 Series Tapchanger Control is used with a Beckwith Electric M-0115A Parallel Balancing Module. The control is provided with a current input which is representative of the circulating current between two or more LTC transformers operating in parallel.

Circulating Current/Delta VAr1 Theory of Operation

The general paralleling schemes for two and three transformer paralleling using the circulating current method are shown in Figure 31 through Figure 33.

Figure 31 is a schematic of the current circuit only; redrawn from the Paralleling Scheme figures to allow easier tracing of the load current (I_L) and circulating current (I_p) paths.

A current, proportional to the transformer secondary current, is fed to the M-0115A unit. However, because of the secondary parallel connection, this is actually the vector sum of the desired load current and any undesired circulating current. The M-0115A separates these currents, and sends them to the proper load (LDC) and circulating current inputs of the associated control.

Two current loops are formed. One involves the K3 auxiliary transformers in each of the M-0115A units. This loop forms a measure of the transformer bank circulating current, subtracted from the LDC control input and forced to flow into the control circulating current input.

The second loop involves the K1 and K2 auxiliary transformers. They force the load current to divide properly between the various controls so that each senses its proper portion of the total bank load. Thus, the LDC setting for each control may properly be the same, regardless of whether or not the associated transformer is being used in parallel.

The first current path shown (Circulating Current) has a current analogous in angle and magnitude to the reactive current circulating through the paralleled transformers. It also includes the M-0127A Overcurrent Relay, which is used to detect excessive circulating current and block the tapchanger movement, if this occurs. Also, a lamp will alert the operator when excessive circulating current is detected.

The second path shown (Balance Current), connecting the K1 auxiliary CT of the M-0115A modules together, has a balance current which forces the two load currents of transformers #1 and #2 to be identical. This means that any difference in currents must flow in the circulating current path.

The third and fourth path shown (Half Current and LDC Current), connecting the K2 auxiliary CT of the M-0115A modules together, ensures proper operation of the Load Drop Compensator circuit if one of the transformers is taken out of service by opening its breaker. For instance, if transformer #2 is taken out of service by opening breaker 52-2, then half of transformer #1's load current is forced to flow through the half current loop. In this way, transformer #1's voltage regulating control sees the same load current as it did before, and the proper amount of line drop compensation in the transformer #1 control is maintained. This circuit configuration and grounding points must be maintained, if transformers are to be successfully paralleled.

A more detailed description of the theory of operation is in **Appendix C, Introduction to Circulating Current and Delta VAr1 Paralleling Methods** and **Appendix D, Advanced Circulating Current Paralleling Method**. These sections provide a thorough analysis of parallel LTC transformers operating by the Circulating Current method.

It is suggested that either the non-sequential or Intertap time delay be used when paralleling.

The sensitivity of the control or the amount of control setpoint bias for a 200 mA circulating current is 24 V. For circulating current applications, that is a 24 V setpoint shift for 200 mA of total circulating current input. For Delta VAr1 applications, that is a 24 V setpoint shift for 200 mA of reactive circulating current.

For applications with low transformer impedances, the circulating current or VArs per tap difference is greater than in applications with high transformer impedances. This creates a need for a method to adjust the sensitivity of the control according to the system application. This is accomplished with a sensitivity adjustment on the M-0115A Parallel Balancing Module.

■ **NOTE:** In all M-0115A applications, the M-0115A sensitivity settings should be equal on all paralleled transformers.

M-0115A PARALLEL BALANCING MODULE

Background

When LTC transformers are connected in parallel, a control scheme is necessary to assure that the tap positions of all paralleled transformers remain at or near the same tap position. If tap positions are not maintained at or near the same position, reactive current will circulate between the transformers, wasting energy and overheating the transformers, possibly causing damage. The circulating current control is the most common method for control of LTC transformers in parallel, being covered by ANSI C57.12.10-1988 paragraph 10.2, and has the following advantages:

- Any transformer can be automatically or manually switched-out for maintenance; the remaining units will operate properly (in parallel, if more than two are being used).
- Proper line drop compensator (LDC) action for each unit is provided at all times without adjustment, whether the transformers are operating in parallel or alone.
- Transformers from different manufacturers or vintages can be easily paralleled if they meet certain performance criteria, even if they were not originally equipped for paralleling.

Paralleling

The following application recommendations will help to achieve optimum operation from the M-0115A Parallel Balancing Module.

1. The M-0115A is designed for use with 200 mA = 1 P.U. system currents. If only 5 A currents are available, then a suitable 5 A:0.2 A Auxiliary Current Transformer, such as the Beckwith Electric M-0169A, is recommended.
2. If circuit breakers such as the "52 Line Breaker(s)" and the "24 Tie Breaker(s)" as shown in the paralleling wiring diagrams are present, then their auxiliary contact connections should be included as shown to ensure proper automatic transfer from parallel to independent operations. Please note that auxiliary breaker contacts are shown in the parallel mode with all breakers closed.
3. Do not place the "Parallel/Independent" switch on the front panel of the M-0115A in Independent mode when the transformers are in parallel and under automatic control, as this will disable the controls' ability to monitor, track, and control the paralleling biasing functions of Circulating or Delta VAr1 paralleling.
4. The front panel "Sensitivity" rotary switch of the M-0115A should initially be set to "N" for preliminary testing. The sensitivity should be adjusted to yield a one tap difference of 4-62 mA measured circulating current on a 200 mA current base.

■ **NOTE:** The sensitivity controls of the M-0115As should be kept at the same setting for all units in a paralleled system, and adjusted in unison as required.

Effect of the M-0115A on Control Sensitivity

The sensitivity of the circulating current input to the M-2001 Series Tapchanger Control is fixed at nominal 24 V ±15% at full load current of 0.2 A. The sensitivity of the Tapchanger Controls is then changed by the M-0115A, as illustrated in Table 5.

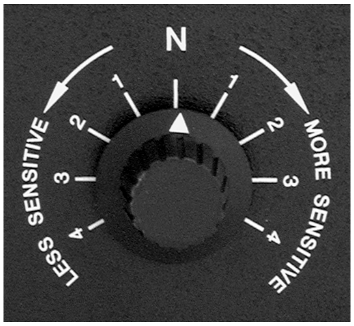

Nominal Full-Scale Sensitivity for M-2001 Series Tapchanger Control		
More Sensitive ↷	4	48 Vac
	3	41 Vac
	2	32 Vac
	1	29 Vac
	N	24 Vac
Less Sensitive ↶	1	20 Vac
	2	17 Vac
	3	14 Vac
	4	12 Vac

Table 5 M-0115A Sensitivity Settings

M-0127A/M-0170A AC CURRENT RELAY

Application

The M-0127A, 10-100 mA AC Overcurrent Relay is a recommended addition to the Circulating Current or Delta VAr1 Paralleling configurations. Its purpose is to monitor the current in the circulating loop between transformers, and interrupt Motor Power to its monitored transformer, should the circulating current exceed a predetermined value. Such excessive current is usually an indication of widely diverging tap positions among the paralleled transformers and is often indicative of a control failure or wiring problem.

As mentioned previously, the amount of circulating current created by a difference in tap positions between paralleled transformers varies widely due to the variety of transformer internal impedances. Typically, a one tap difference between paralleled transformers will generate a circulating current of 4-12 mA on a 200 mA base. The actual value for a given system can be easily read from the primary control as circulating current, using either the HMI or TapTalk communications software. Once the one tap value of circulating current is determined, the setting for the M-0127A should be slightly greater than 4 times the observed value. This will establish a maximum divergence in tap positions of 4 taps before the paralleled control is blocked from further operation. Its range permits the maximum circulating current to be set from 5% to 50% of the rated full load current.

The output should be connected in series with the common lead of the automatic control circuit of the motor starter relay. Polarity of the M-0127A input and output can be ignored.

Alarm

An alarm relay can be used in series with the output to obtain an alarm contact when the AC Current Relay has locked out the control.

The following relay and socket are recommended:

- Relay: Potter & Brumfield KRP11AG: 120 Vac, DPDT contacts rated 10 A, 8-pin plug
- Socket: Potter & Brumfield 27E122: 8-pin industrial type with screw terminals for surface mounting

■ **NOTE:** Both are available from Beckwith Electric.

Paralleling With a Mixture of Controls

Problems have existed in the past when equipment of different manufacturers has been mixed in an application, but the problems disappeared when the old paralleling equipment and controls were replaced with Beckwith Electric units. Since not all of the reasons for the past problems are known in detail, and since information concerning the detailed performance of other controls is not known, Beckwith Electric cannot assure maximum performance where a mixture of equipment from various manufacturers exists.

CIRCULATING CURRENT PARALLELING CHECKOUT PROCEDURE

Two Transformer Verification

■ **NOTE:** There must be a load on the transformer to perform this test.

1. Place all transformer controls (adapter panels) in **MANUAL** and parallel balancing modules (M-0115A) in the **INDEPENDENT** switch position.
2. Verify that the M-2001 controls are set to circulating current paralleling method.
3. Set all the transformer controls to the same tap position and the same bandwidth setting.

   Neither control should be calling for a raise or lower.
4. Close all transformer breakers and tie breakers.
5. Verify that the load current has the correct polarity.

   If a phase correction must be used because of the voltage configuration or CT phase, then both controls must be set to the same value.
6. With the M-2001 Series, the CT/VT phasing must be 0 degrees.

7. Set Transformer #1 Line Drop Compensation F (Forward) Resistance to 24.

   The control should call for a Raise. (If the control calls for a Lower, then the polarity of the line current coming into the control is reversed, and must be corrected before continuing the test.)

8. Set Transformer #1 Line Drop Compensation F (Forward) Resistance to 0.
9. Set Transformer #2 Line Drop Compensation F (Forward) Resistance to 24.

   The control should call for a Raise. If the control calls for a Lower, then the polarity of the line current coming into the control is reversed, and must be corrected before continuing the test.

10. Set Transformer #2 Line Drop Compensation F (Forward) to 0 Resistance.
11. Place the Transformer #1 M-0115A **Parallel/Independent** switch in the **Parallel** position.
12. Place the Transformer #2 M-0115A **Parallel/Independent** switch in the **Parallel** position.
13. Verify Transformer #1 voltage is within the band.
14. Manually raise Transformer #1 one to two taps (it could take three or four to obtain a response).
15. Manually lower Transformer #2 one to two taps (could take three or four to obtain a response).
16. Verify that Transformer #2 calls for a Raise and Transformer #1 calls for a Lower.
17. Observe the following on the Circulating Current screen of all the controls:
    a. Transformer #1 should have a lagging circulating current
    b. Transformer #2 should have a leading circulating current.
    c. The magnitude of Transformer #1 and #2 circulating current should be the same.

18. Manually return Transformer #1 and Transformer #2 to the same tap.

    Neither control should call for a Raise or Lower.

19. Manually raise Transformer #2 one or two taps (may take 3 or 4 to obtain a response).
20. Manually lower Transformer #1 one or two taps (may take 3 or 4 to obtain a response).
21. Verify that Transformer #1 calls for a raise and Transformer #2 calls for a lower.
22. Manually return Transformer #1 and Transformer #2 back to the same tap.

    Neither control should call for a Raise or Lower.

▲ **CAUTION:** If the loads are not evenly balanced between the two transformers then the voltage on the transformer with the larger load may drop and the control may call for a raise and the transformer with the smaller load may rise and the control may call for a lower.

23. Open the tie breaker between Transformer #1 and Transformer #2 (24).
24. Verify that the controls do not call for a Raise or Lower.
25. Manually raise Transformer #1 two or three taps (may take 4 or 5 to obtain a response).
26. Verify that Transformer #1 calls for a Lower, the circulating current is zero on both controls and Transformer #2 is not affected.
27. Manually return Transformer #1 to the same tap.
28. Manually raise Transformer #2 two or three taps (may take 4 or 5 to obtain a response).
29. Verify that Transformer #2 calls for a Lower, the circulating current is zero on both controls and Transformer #1 is not affected.
30. Manually return Transformer #2 to the same tap.
31. Close the tie breaker between Transformer #1 and Transformer #2 (24).
32. Manually raise Transformer #1 two or three taps (may take 4 or 5 to obtain a response).
33. Verify that Transformer #1 calls for a Lower and Transformer #2 calls for a Raise.
34. Place both controls (adapter panels) in **AUTOMATIC** at the same time.

    The controls should cause the tapchangers to return to the same tap or within 1–2 taps of each other.

35. Return both controls to **MANUAL** (adapter panels).
36. Manually place Transformer #1 and Transformer #2 on the same tap and in the bandwidth.

37. Open the transformer breaker on Transformer #2 (52-2).

▲ **CAUTION:** Transformer #1 is now supplying all the load, its voltage may drop.

38. Verify that Transformer #1 is not affected and the circulating current on the control is zero.
39. Manually raise Transformer #1 two or three taps (may take 4 or 5 to obtain a response).
40. Verify that Transformer #1 calls for a Lower and that Transformer #2 is not affected.
41. Manually return Transformer #1 to the same tap.
42. Close the Transformer #2 breaker (52-2).
43. Open Transformer #1 breaker (52-1)
44. Verify Transformer #2 is not affected and the circulating current on the control is zero.

▲ **CAUTION:** Transformer #2 is now supplying all the load, its voltage may drop.

45. Manually raise Transformer #2 two or three taps (may take 4 or 5 to obtain a response).
46. Verify that Transformer #2 calls for a Lower and Transformer #1 is not affected.
47. Manually return Transformer #2 to the same tap.
48. Close the Transformer #1 (52-1).

—Test complete—
Place the desired settings on the controls and set all controls to AUTOMATIC.

Three Transformer Verification

■ **NOTE:** There must be a load on the transformers to perform this test.

1. Set all transformer controls as follows:
    a. Adapter Panels to **MANUAL**
    b. Parallel Balancing modules (M-0115A) set to **INDEPENDENT**. Set the sensitivity to **N**.
    c. If the M-0127A is present, set the block level to maximum
2. Verify that the M-2001 controls are set to circulating current paralleling method.

    The M-2001 will display circulating current even if paralleling is not selected.
3. Set all the transformer controls to the same tap position and the same bandwidth setting.

    Neither control should be calling for a raise or lower.
4. Close all transformer breakers and tie breakers.
5. Verify that the load current has the correct polarity.
6. With the M-2001 Series, the CT/VT phasing must be 0 degrees.

    If a phase correction must be used because of the voltage configuration or CT phase, then both controls must be set to the same value.
7. Verify that the voltage and CT transformers are connected to the same phase.
8. Set Transformer #1 Line Drop Compensation F (Forward) Resistance to 24.

    The control should call for a Raise. If the control calls for a Lower, then the polarity of the line current coming into the control is reversed, and must be corrected before continuing the test.
9. Set Transformer #1 Line Drop Compensation F (Forward) Resistance to 0.
10. Set Transformer #2 Line Drop Compensation F (Forward) Resistance to 24.

    The control should call for a Raise. If the control calls for a Lower, then the polarity of the line current coming into the control is reversed, and must be corrected before continuing the test.
11. Set Transformer #2 Line Drop Compensation F (Forward) Resistance to 0.
12. Set Transformer #3 Line Drop Compensation F (Forward) Resistance to 24.

    The control should call for a Raise. If the control calls for a Lower, then the polarity of the line current coming into the control is reversed, and must be corrected before continuing the test.

13. Set Transformer #3 Line Drop Compensation F (Forward) Resistance to 0.
14. Set Transformer #1, #2 and #3 Parallel Balancing Modules (M-0115As) to the **PARALLEL** position
15. Manually Raise Transformer #1 two or three taps (may Take 4 or 5 to obtain a response).
16. Verify that Transformer #2 and Transformer #3 call for a Raise and Transformer #1 calls for a Lower.
17. Observe the following on the Circulating Current screen of all the controls:
    a. Transformer #1 should have a lagging circulating current
    b. Transformer #2 and Transformer #3 should have a leading circulating current.
    c. The magnitude of Transformer #2 and #3 circulating current should be one half of the magnitude observed on Transformer #1.

18. Return Transformer #1 back to the same tap. All controls should return to a state where no lower or raise is called for.
19. Manually Raise Transformer #2 two or three taps (may Take 4 or 5 to obtain a response).
20. Verify that Transformer #1 and Transformer #3 call for a Raise and Transformer #2 calls for a Lower.
21. Observe the following on the Circulating Current screen of all the controls:
    a. Transformer #2 should have a lagging circulating current
    b. Transformer #1 and Transformer #3 should have a leading circulating current.
    c. The magnitude of Transformer #1 and #3 circulating current should be one half of the magnitude observed on Transformer #2.

22. Return Transformer #2 back to the same tap.
23. Manually Raise Transformer #3 two to three taps up (may Take 4 or 5 to obtain a response).
24. Verify that Transformer #1 and Transformer #2 call for a Raise and Transformer #3 calls for a Lower.
25. Observe the following on the Circulating Current screen of all the controls:
    a. Transformer #3 should have a lagging circulating current
    b. Transformer #1 and Transformer #2 should have a leading circulating current.
    c. The magnitude of Transformer #1 and #2 circulating current should be one half of the magnitude observed on Transformer #3.

26. Return Transformer #3 back to the same tap.

▲ **CAUTION:** If the loads are not evenly balanced between the transformers then the voltage on the transformer with the larger load may decrease and the control may call for a Raise and the transformer with the smaller load may increase and the control may call for a Lower.

27. Open the tie breaker between Transformer #1 and Transformer #2 (24-1), then verify that the controls are not affected.
28. Manually Raise Transformer #1 two to three taps, then verify that Transformer #2 and #3 are not affected. Transformer #1 should call for a Lower and have zero circulating current on it's control.
29. Return Transformer #1 back to the same tap.
30. Manually Raise Transformer #2 two or three taps, then verify the following:
    a. Transformer #2 calls for a Lower and should have lagging circulating current.
    b. Transformer #3 calls for a Raise and should have leading circulating current.
    c. Transformer #1 is not affected.

31. Place Transformer #2 and Transformer #3 Controls to **AUTO** at the same time. Observe where the tapchanger positions settle, and adjust the sensitivity of the M-0115A if needed.

32. Manually return Transformer #2 back to the same tap.

▲ **CAUTION:** If the loads are not evenly balanced between the transformers then the voltage on the transformer with the larger load may decrease and the control may call for a Raise and the transformer with the smaller load may increase and the control may call for a Lower.

33. Close tie breaker 24-1 and open tie breaker 24-2 (between Transformer #2 and Transformer #3).
34. Verify that the controls are not affected.
35. Manually Raise Transformer #3 two or three taps, and then verify that Transformer #1 and Transformer #2 are not affected. Transformer #3 should call for a Lower.
36. Manually return Transformer #3 back to the same tap.
37. Manually Raise Transformer #1 two or three taps, then verify the following:
    a. Transformer #1 calls for a Lower and should have lagging circulating current.
    b. Transformer #2 calls for a Raise and should have leading circulating current.
    c. Transformer #3 is not affected.

38. Place Transformer #1 and Transformer #2 Controls to **AUTO** at the same time. Observe where the tapchanger positions settle, and adjust the sensitivity of the M-0115A if needed.
39. Manually return Transformer #1 back to the same tap.
40. Close tie breaker 24-1 and 24-2.

■ **NOTE:** Since Transformer #2 and #3 will be supplying all the load, their voltage may decrease.

41. Open Transformer #1 breaker 52-1, then verify that Transformer #2 and #3 are not affected.
42. Manually Raise Transformer #2 two or three taps, then verify that Transformer #2 calls for a Lower and Transformer #3 calls for a Raise.
43. Manually return Transformer #2 to the same tap.
44. Close Transformer #1 breaker 52-1.

■ **NOTE:** Since Transformer #1 and #3 will be supplying all the load, their voltage may decrease.

45. Open Transformer #2 breaker 52-2, then verify Transformer #1 and #3 are not affected.
46. Manually Raise Transformer #1 two or three taps, then verify that Transformer #1 calls for a Lower and Transformer #3 calls for a Raise.
47. Manually return Transformer #1 back to the same tap.
48. Close Transformer #2 breaker 52-2.

■ **NOTE:** Since Transformer #1 and #2 will be supplying all the load, their voltage may decrease.

49. Open Transformer #3 breaker 52-3, then verify that Transformer #1 and #2 are not affected.
50. Manually Raise Transformer #1 two or three taps, then verify that Transformer #1 calls for a Lower and Transformer #2 calls for a Raise.
51. Manually return Transformer #1 to the same tap.
52. Close Transformer #3 breaker 52-3.

—Test complete—

Place the desired settings on the controls and set all controls to AUTOMATIC.

DELTA VAR1 PARALLELING CHECKOUT PROCEDURE

Two Transformer Verification

■ **NOTE:** There must be a load on the transformer to perform this test.

1. Place all transformer controls (adapter panels) in **MANUAL** and parallel balancing modules (M-0115A) in the **INDEPENDENT** switch position.
2. Verify that the M-2001 controls are set to Delta VAR1 paralleling method.

   The M-2001 will display circulating current even if paralleling is not selected.
3. Set all the transformer controls to the same tap position and the same bandwidth setting.

   Neither control should be calling for a raise or lower.
4. Close all transformer breakers and tie breakers.
5. Verify that the load current has the correct polarity.
6. With the M-2001 Series, the CT/VT phasing must be 0 degrees.

   If a phase correction must be used because of the voltage configuration or CT phase, then both controls must be set to the same value.
7. Verify that the voltage and CT transformers are connected to the same phase.
8. Set Transformer #1 Line Drop Compensation F (Forward) Resistance to 24.

   The control should call for a Raise. If the control calls for a Lower, then the polarity of the line current coming into the control is reversed, and must be corrected before continuing the test.
9. Set Transformer #1 Line Drop Compensation F (Forward) Resistance to 0.
10. Set Transformer #2 Line Drop Compensation F (Forward) Resistance to 24.

    The control should call for a Raise. If the control calls for a Lower, then the polarity of the line current coming into the control is reversed, and must be corrected before continuing the test.
11. Set Transformer #2 Line Drop Compensation F (Forward) Resistance to 0.
12. Set Transformer #1 and #2 M-0115A Parallel Balancing Modules to the **PARALLEL** position.

■ **NOTE:** There may be several tap position combinations that have similar circulating current readings. Use the combination that keeps the voltage closest to the band center. This helps the testing to indicate that circulating current is causing the controls to respond instead of the voltage.

13. While observing circulating current on the M-2001, manually adjust the tap position on each transformer to achieve the lowest circulating current value, while keeping the voltage close to the bandcenter setting.
14. Verify that the voltage is within the band, then:
    a. Manually raise Transformer #1 one or two taps (may take 3 or 4 to obtain a response).
    b. Lower Transformer #2 one or two taps (may take 3 or 4 to obtain a response).
    c. Verify that Transformer #2 calls for a Raise and Transformer #1 calls for a Lower.

15. Observe the following on the Circulating Current screen of all the controls:
    a. Transformer #1 should have a lagging circulating current
    b. Transformer #2 should have a leading circulating current.
    c. The magnitude of Transformer #1 and #2 circulating current should be the same.

16. Manually return Transformer #1 and Transformer #2 back to the original tap. Neither control should call for a Raise or Lower.
17. Verify that the voltage is within the band, then:
    a. Manually Raise Transformer #2 one or two taps (may take 3 or 4 to obtain a response).
    b. Manually Lower Transformer #1 one or two taps (may take 3 or 4 to obtain a response).
    c. Verify that Transformer #1 calls for a Raise and Transformer #2 calls for a Lower.

18. Manually return Transformer #2 and Transformer #1 back to the original tap. Neither control should call for a Raise or Lower.

▲ **CAUTION:** If loads are not evenly balanced between the two transformers, then the voltage on the transformer with the larger load may decrease and the control may call for a Raise. The transformer with the smaller load may increase and the control may call for a Lower.

19. Open the tie breaker between Transformer #1 and Transformer #2 (24), then verify that no tapchanges are initiated by the controls.
20. Manually Raise Transformer #1 two or three taps (may take 4 or 5 to obtain a response), then verify:
    a. Transformer #1 calls for a Lower and the circulating current goes to zero.
    b. Transformer #2 is not affected and the circulating current goes to zero.
21. Manually return Transformer #1 back to the same tap.
22. Manually Raise Transformer #2 two or three taps (may take 4 or 5 to obtain a response), then verify:
    a. Transformer #2 calls for a Lower.
    b. Transformer #1 is not affected.
23. Manually return Transformer #2 back to the same tap.
24. Close the tie breaker between Transformer #1 and Transformer #2 (24).
25. Manually Raise Transformer #1 two or three taps (may take 4 or 5 to obtain a response), then verify:
    a. Transformer #1 calls for a Lower
    b. Transformer #2 calls for a Raise.
26. Place both Controls (adapter panel) to **AUTOMATIC** at the same time.

    The Controls should cause the tapchangers to return to the tap position within 1 to 2 taps of where the circulating current (actually VArs) is minimum.
27. Place both Controls in **MANUAL** (adapter panel).
28. Manually position Transformer #1 and Transformer #2 to the original tap positions and within the bandwidth.

■ **NOTE:** Since Transformer #1 will be supplying all the load, its voltage may decrease.

29. Open Transformer #2 breaker (52-2), then verify Transformer #1 Control does not initiate any tapchanges.
30. Manually Raise Transformer #1 two or three taps (may take 4 or 5 to obtain a response), then verify:
    a. Transformer #1 calls for a Lower and the circulating current goes to zero.
    b. Transformer #2 is not affected and the circulating current goes to zero.
31. Manually return Transformer #1 back to the same tap.
32. Close Transformer #2 breaker (52-2).

■ **NOTE:** Since Transformer #2 will be supplying all the load, its voltage may decrease.

33. Open Transformer #1 breaker (52-1), then verify that Transformer #2 is not affected.
34. Manually Raise Transformer #2 two or three taps (may take 4 or 5 to obtain a response), then verify:
    a. Transformer #2 calls for a Lower and circulating current of the controls is zero.
    b. Transformer #1 is not affected and circulating current of the controls is zero.
35. Manually adjust Transformer #2 to the same tap as Transformer #1.
36. Close Transformer #1 breaker (52-1).

—Test complete—

Place the desired settings on the controls and set all controls to AUTOMATIC.

7.0 Delta VAr2 Paralleling

If only two transformers are considered for Paralleling, and Line Drop Compensation is NOT required, Delta VAr2 Paralleling (available in the M-2001C Base-T and Comprehensive, and the M-2001D) should be considered. It utilizes the same algorithm as Delta VAr1, but is accomplished without the use of external Parallel Balancing Modules (M-0115A) or Overcurrent Relays (M-0127A), and without special ratio correcting auxiliary CTs. Because of this, the wiring is greatly simplified (See Figure 36).

The two controls on the front panel of the M-0115A Parallel Balancing Module are:

1. The Parallel/Independent Switch
2. The Sensitivity rotary switch that can be set from -4 to +4 with a central neutral setting

These functions are mimicked in software for Delta VAr2 paralleling.

The Parallel/Independent switch is functionally duplicated by supplying a ground to the Neutral Position Detector Input of the M-2001 Series control. Asserting a ground mimics placing the switch in the independent position. Figure 36 shows the two most likely contacts for this function: the 24B N.O. contact that closes when the tie breaker is opened, and the 43P (Parallel/Independent switch) which closes the contact when placed in independent. Optional contacts from the two 52 line breakers are also shown as options.

Advantages:

1. Simplifies current loop wiring complexity over Delta VAr1 and Circulating Current.
2. Eliminates the requirement of M-0115A, external paralleling device.
3. Eliminates need for M-0127A overcurrent relay while providing same function.
4. Compensates for mismatched CTs without special Auxiliary CTs.
5. Offers same performance features as Delta VAr1.
6. Tap position knowledge is not required by the control for operation.

Limitations:

1. Limited to two transformers maximum.
2. No provisions for LDC.
3. Uses Neutral Tap Detection input for 43P precluding the use of LTC-KeepTrack.

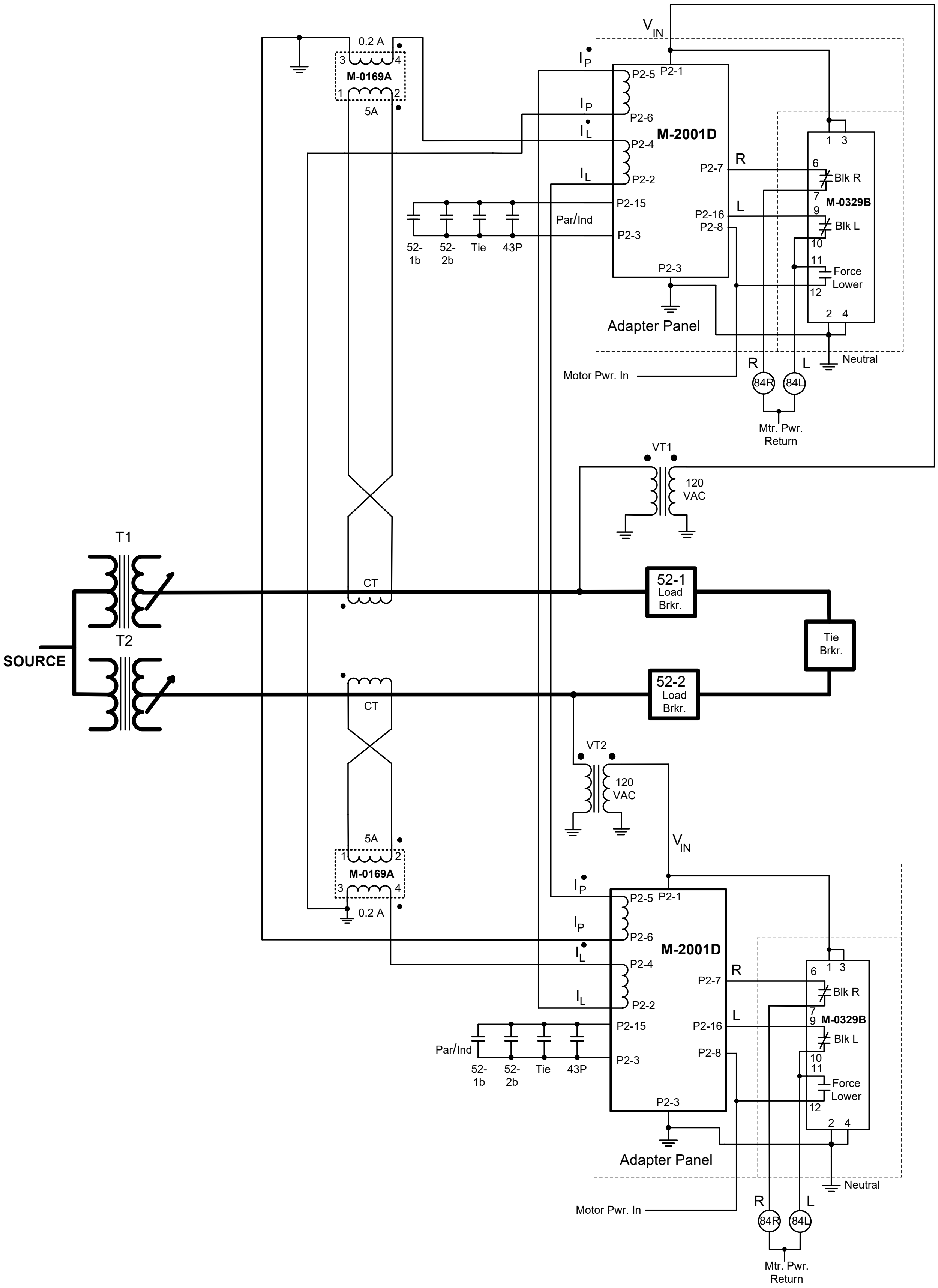

Figure 36 Delta VAr2 Paralleling Configuration

Control Connections For Delta VAr2 Paralleling																	
		Adapter Panels															
Control Connector P2	**Function**	**M-2067B as M-0067E**	**M-2270B General Purpose**	**M-2280B GE-LTC**	**M-2339 AC UJ,IJ,MJ**	**M-2278 Siemens**	**M-2131B AVE-GEC**	**M-2174B Moloney**	**M-2279D PA 550**	**M-2379 PA 110/550**	**M-2354C PA 550**	**M-2220 MR MK20**	**M-2230 MR MK30**	**M-2286 West MS/TM**	**M-2326 West. SJS**	**M-2324C PA. Reg**	**M-2347 UJ-1 Reg**
P2-1	**Voltage Polarity**	TB1-1	TB1-10	TB3-1	TB4-3	TB3-3	TB1-1	TB3-1	TB3-10	TB4-72	TB1-10	TB1-1	TB1-1	Connect through existing "MS" & "TM" Round Multi-Pin Connectors	TB1-10	TB1-10	TB1-10
P2-2	**Line Current Return**	TB1-2	TB1-15	TB3-2	TB4-5*	TB3-5	TB1-4**	TB3-2	TB3-CT1	TB4-153	TB1-15	TB1-5	TB1-5		M-0169-1*	TB1-15	TB1-15
P2-3	**Voltage Return (Neutral)**	TB1-3	TB1-8	TB3-5	TB4-6	TB3-6	TB1-3	TB3-3	TB3-G	TB4-153	TB1-8	TB1-2	TB1-2		TB3-E10	TB1-8	TB1-8
P2-4	**Line Current Polarity**	TB1-4	TB1-14	TB3-3	TB4-4*	TB3-4	TB1-5**	TB3-4	TB3-CT2	TB4-258	TB1-14	TB1-10	TB1-10		M-0169-2*	TB1-14	TB1-14
P2-5	**Circulating Current Polarity**	TB1-6	TB1-4	TB3-9	TB4-2	TB3-2	TB1-6	TB3-6	TB3-287	TB4-187	TB1-4	TB1-11	TB1-11		TB1-4	TB1-4	TB1-4
P2-6	**Circulating Current Return**	TB1-5	TB1-3	TB3-8	TB4-1	TB3-1	TB1-7	TB5-5	TB3-285	TB4-185	TB1-3	TB1-12	TB1-12		TB1-3	TB1-3	TB1-3
P2-7	**RAISE Output**	TB1-7	TB1-5	TB3-6	TB4-10	TB3-10	TB1-10	TB3-7	TB3-25	TB4-63	TB1-5	TB1-18	TB1-18		TB3-E18	TB1-5	TB1-5
P2-8	**Motor Power Input**	TB1-8	TB1-9	TB3-4	TB4-9	TB3-9	TB1-9	TB3-8	TB3-52	TB4-71	TB1-9	TB1-19	TB1-19		TB3-E10	TB1-9	TB1-9
P2-16	**LOWER Output**	TB1-9	TB1-6	TB3-7	TB4-11	TB3-11	TB1-11	TB3-9	TB3-23	TB4-64	TB1-6	TB1-15	TB1-15		TB3-E15	TB1-6	TB1-6
		* = 5 Amp Input, ** = 1 Amp Input															
Delta VAr2 Parallel/Independent Inputs																	
P2-3	**Neutral**	TB1-3	TB1-8	TB3-5	TB1-3 or TB3-6	TB1-8 or TB3-6	TB1-3	TB1-3 or TB3-3	TB1-8	TB1-8 or TB4-153	TB1-8	TB1-2	TB1-2	See Above	TB1-8	TB1-8	TB1-8
P2-15	**Delta VAr2 Disable**	TB2-21	TB1-11	TB3-14	TB2-21	TB1-11	—	TB2-21	TB1-11	TB1-11	TB1-11	TB1-60	TB1-60		TB1-11	TB1-11	TB1-11

Table 6 Adapter Panel/Control Connections for Delta VAr2 Paralleling

Delta VAr2 Paralleling and Delta VAr2 Paralleling + KeepTrack™

The theoretical basis for the Delta VAr2 Method of paralleling is that paralleled transformers are meant to SHARE the VAr load (as well as the KW load) of the load bus. Since the KW sharing of the parallel transformers is determined by the relative transformer impedances and NOT the tap position, KW flow should not effect tap position choice. Further, that the best choice of loading parallel transformers is to maintain the VAr sharing regardless of KW loading which can be accomplished with relative tap positioning.

The Delta VAr2 Method will result in the VAr flow to the substation load to be shared in the appropriate ratio of the paralleled transformers' ratings. It should be noted that auxiliary CTs are required in circulating current schemes to balance the currents when transformers with different impedances are paralleled. Those auxiliary CTs are not necessary when the Delta VAr2 Method is used.

The Delta VAr2 implementation is limited to use with no more than two transformers and each transformer current is input to each control. This eliminates the need for the parallel balancing module and removes the path for the installation of the overcurrent relay. For this implementation, the sensitivity setting is added to the M-2001 Series Tapchanger Control along with a circulating current overcurrent inhibit function. The Delta VAr2 implementation also contains a CT ratio-matching setting making it unnecessary to match CT ratios exactly to transformer MVA ratings for proper operation.

The Delta VAr2 Method is incorporated in the Beckwith Electric M-2001 Series Tapchanger Control, as an option. This option internally calculates and compares the individual transformer VAr flows. Decisions for voltage setpoint biasing are then made and implemented to change tap positions in such a manner that the difference in VAr flow is minimized.

Action is taken continuously as the MVAr load is changing such that the magnitude of difference in VAr loading is minimized (depending on the VAr difference of one, off-optimum, tap position).

The use of LDC (line drop compensation) is precluded when Delta VAr2 is used since no provision is made for the increase in load currents in one transformer when the other is out of service. The result would be doubling the LDC effect when in independent operation.

Delta VAr2 Connection

As shown in Figure 36, the current input is connected to the load current terminals of the control and then into the circulating current terminals (I_P) of the paralleled transformer control. Each control now sees the same voltage and each transformer current separately. This allows each control to calculate the VAr flows in both transformers for comparison, without externally sorting out the load and circulating current values. Breaker contact 52-3b is used to signal the M-2001 Series control to disable paralleling using the neutral light input (redefined when Delta VAr2 is selected). An external independent/parallel switch (43P) is suggested to provide manual control for testing and maintenance. The effectiveness of this grounding is important for the recognition of this condition.

Paralleling by the Delta VAr2 method does not use the M-0115A Parallel Balancing Module. This method of paralleling can only be used for two transformers. Refer to Figure 36 for the Delta VAr2 connections. Instead, the two load currents are brought into the control, and the actual Delta VArs which exist between the paralleled transformers is calculated internally. When using the Delta VAr2 method, the control's load current input is to be connected to the load current CT of the transformer which is controlling the tap position. The control's circulating current is to be connected to the load current CT for the opposite paralleled transformer.

The measured voltage of the M-2001 Series controls on each of the transformers will be biased in such a way as to attempt to minimize the circulating current between the two. In the case of Delta VAr2, the tap positions will minimize the difference in VArs from each transformer.

For Delta VAr2 applications, there is a 24 V setpoint shift for 200 mA of calculated reactive current difference between transformers (Delta VAr2 is only applicable for two parallel transformer applications).

For applications with low transformer impedances, the circulating current or VArs per tap difference is greater than in applications with high transformer impedances. This creates a need for a method to adjust the sensitivity of the control according to the system application. The Delta VAr2 application method uses no M-0115A module, therefore, a control setting is provided to accomplish the sensitivity adjustment.

■ **NOTE:** In all Delta VAr2 applications, the sensitivity settings should be equal on all paralleled transformer controls.

Exclusively for the Delta VAr2 method, there are three functions activated and set in the Configuration menu for proper operation: **Sensitivity**, **Circulating Current Limit (Reactive)**, and **Input Ratio (Load/parallel)**.

The Delta VAr2 **Sensitivity** ranges from -4.0 to +4.0, as did the M-0115A adjustment. At a Delta VAr2 Sensitivity setting of 0.0, 100% of calculated reactive current difference will be used to bias the setpoint. At a setting of -4.0, only 50% of the calculated reactive current difference will be used to bias the setpoint, making the control less sensitive to the circulating current. At a setpoint of +4.0, the bias will be adjusted by a value of 200% of the calculated reactive current difference, making the control more sensitive to the system current.

The **Circulating Current Limit (Reactive)** setpoint establishes a limit on the calculated reactive current difference between transformers. The settings range from 5 mA to 200 mA in 1 mA increments. If the calculated reactive current difference reaches this setpoint, the operation of the control will be blocked and the alarm output function will be activated, if enabled. The purpose of this limit is to stop any runaway condition. This feature is required to replace the M-0127A overcurrent relay used in the circulating current and Delta VAR1 applications.

> ■ **NOTE:** Care must be taken in setting the Delta VAr2 Circulating Current Limit (Reactive), to ensure it is high enough to allow a two or three tap difference from optimum in transformers before operating. Some knowledge of system impedances are useful in determining this setting, but the current difference may also be tested for immediate system conditions by reading the current change when one tap is changed on either transformer.

The **Input Ratio (Load/parallel)** is used to adjust the sensitivity to the load current input versus the circulating current input (opposite transformer load current) to compensate for unequal CT ratios between transformers. For proper operation with a ratio setting of 1, the ratio of the CT ratios must be equal to the ratio of the transformer ratings (CT1/CT2=MVA1/MVA2).

$$\left(\frac{\text{TX1 Rating}}{\text{TX2 Rating}}\right)\left(\frac{\text{TX2 CT Ratio}}{\text{TX1 CT Ratio}}\right) = {}^{\underline{I}}\,\text{Ratio TX 1}$$

$$\left(\frac{\text{TX2 Rating}}{\text{TX1 Rating}}\right)\left(\frac{\text{TX1 CT Ratio}}{\text{TX2 CT Ratio}}\right) = {}^{\underline{I}}\,\text{Ratio TX 2}$$

Example: A 20 MVA transformer is being paralleled with a 15 MVA transformer. If the CT ratios are 2000 A and 1500 A to 0.2 A, no compensation would be required (both transformers are fully loaded when the CT outputs are 200 mA.) However, if they each had 2000 A to 0.2 A CTs, the **Input Ratio** on the 20 MVA transformer control should be 1.34, and the **Input Ratio** on the 15 MVA transformer control should be 0.75.

The settings for this ratio are 0.50 to 2.00 in 0.01 increments. When the setting is 0.50, the control will be 0.50 times as sensitive to the VArs from the circulating current input versus the load input current. The default setting for the sensitivity is 1.00, indicating the ratio of the CT ratios are equal to the ratio of the transformer ratings.

This feature can also be used to replace the need for auxiliary transformer for matching transformer CT ratios. No correction is necessary to compensate for impedance differences in the transformers with Delta VAR operation.

For Delta VAr2 applications (without KeepTrack), paralleling will be disabled if either current input drops to less than approximately 10 mA or if a neutral input is present. When Delta VAr2 operation is configured, the normal neutral input is directed to this duty rather than the normal neutral light operation. It is highly recommended that this input be connected to operate whenever any breaker opens which isolates the transformer from parallel operation.

For Delta VAr2 Paralleling mode the Auxiliary Input A1 will be the Delta VAr2 Disable Input. This is needed since the Neutral Position Input is used for KeepTrack.

> ■ **NOTE:** This input configuration has changed from previous firmware versions (V01.05.13 and prior).

Delta VAr2 Paralleling Setup from TapTalk S-2001D

■ **NOTE:** This procedure requires Level 2 Access.

1. Select **Setup/Configuration** from the TapTalk toolbar. TapTalk will display the Configuration screen.
2. From the "Paralleling" section, select DVAr 2 or DVAr 2 (KeepTrack) Paralleling Type. Enter the DVAr2 Sensitivity, Circulating Current Limit (Reactive) and Input Ratio (Load/parallel) (Figure 37).
3. Select Save. TapTalk will display a "Confirm Writing to Device" confirmation screen.
4. Select OK. TapTalk will display a confirmation screen.

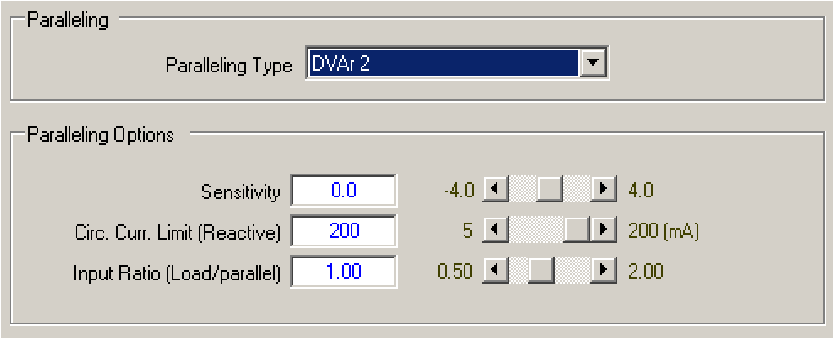

Paralleling

Paralleling Type: DVAr 2

Paralleling Options

Sensitivity: 0.0 (-4.0 to 4.0)

Circ. Curr. Limit (Reactive): 200 (5 to 200 (mA))

Input Ratio (Load/parallel): 1.00 (0.50 to 2.00)

Figure 37 DVAr2 and DVAr2 (KeepTrack) Paralleling Settings (Configuration Screen)

Delta VAr2 Paralleling Setup from the M-2001D HMI

It is highly recommended to setup the Paralleling scheme using TapTalk. However, the controls may be setup from the HMI of each paralleled control.

■ **NOTE:** This procedure requires Level 2 Access.

1. Press the Down Arrow (CNFG Hot Button) pushbutton to wake the unit. The menu will advance to "CONFIGURATION".

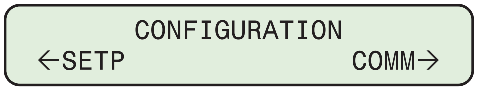

```
     CONFIGURATION
←SETP             COMM→
```

2. Press the Down Arrow pushbutton once. The unit will display the following:

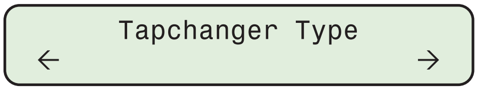

```
    Tapchanger Type
←                     →
```

3. Press the Right or Left arrow pushbutton, as necessary, to navigate to the "Paralleling" menu.

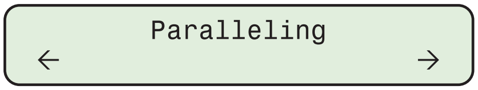

```
      Paralleling
←                     →
```

4. Press the Down arrow pushbutton, until the "Paralleling Type" screen is displayed. Select DELTA VAR #2 or DELTA VAR #2 (KT) then press the **ENT** pushbutton. The HMI will display the selection.

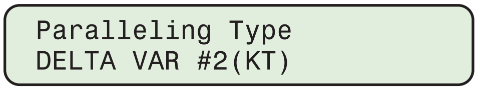

```
Paralleling Type
DELTA VAR #2(KT)
```

5. Press the Down arrow pushbutton to navigate through the setup screens:
   - DVAR2 Sensitivity
   - DVAR2 Reac I Limit
   - DVAR2 I Ratio

This Page Left Intentionally Blank

A Adapter Panel Interconnections

■ **NOTE:** See the Adapter Panel/Control Connections reference tables (Tables 1, 4, 6) in the previous section for additional information.

APPLICATION CONSIDERATIONS

Interposing Motor Drive Relay, Buzz, Chatter, and Lock-Up

Some installations of the M-2001 series Tapchanger Control may experience interposing relay buzzing, chatter (severe buzzing), or in extreme cases, lock-up and runaway tap changer operation. This is due to the Interposing Motor Drive relays in the LTC drive circuitry of the Tap Changer. Trends in manufacturing have resulted in the use of smaller relays, such as the "ice cube" socketed relays, or recently, PC mounted miniature relays. These often work well with the M-2001 series control, unless a "sensitive coil" type relay is used.

With sensitive coil configurations, even though the pull-in current is usually in excess of 10 mA, the "maintain" or "holding" current can be as low as 1-2 mA. At that level, the leakage current from protective components in the M-2001 series control, can cause the relay armature to buzz or lock-up the interposing relay.

The leakage current in the M-2001 series control is necessary to ensure compliance with EMI/RFI immunity, as defined in IEC/IEEE industry standards for Substation Control equipment. Beckwith Electric standards compliance is defined in the "Tests & Standards" section of the applicable M-2001 series Specification. To ensure compliance, all inputs and outputs of the M-2001 series controls are protected by appropriate bypass devices to ensure proper protection from mis-operation due to noise, transients, EMI, etc. In addition, all M-2001 series controls include "KeepTrack™" internal monitoring circuitry for use with single phase regulators. KeepTrack requires status monitoring of the control’s Raise/Lower output switching devices.

Adding shunt resistance to each of the output relay circuits will minimize the interposing relay's sensitivity to small leakage currents, thereby eliminating the relay buzz, chatter, and lock-up. Refer to Table A-1 and Table A-2 to select the proper resistor value and wattage for specific applications.

■ **NOTE:** Use the highest value of resistance in a given application that eliminates the problem.

For convenience, Beckwith Electric includes the **B-2048 Resistor Assembly** with certain Adapter Panels and Terminal Block assemblies. When required, the B-2048 should be installed on the Adapter Panel Terminal Block as indicated on the B-2048 Application Guide insert included with the Assembly.

For 120 Vac Coil Interposing Relays			
Resistor Value	**Shunt I**	**Power Dissipation**	**Minimum Wattage**
5.6 KΩ	21.5 mA	2.60 W	5 W
5.1 KΩ	23.5 mA	2.82 W	7 W
4.7 KΩ	25.5 mA	3.06 W	7 W
4.3 KΩ	27.9 mA	3.35 W	7 W
3.9 KΩ	30.8 mA	3.69 W	10 W
3.3 KΩ	36.4 mA	4.36 W	10 W

Table A-1 Resistor Selection for 120 Vac Coil Interposing Relays

For 240 Vac Coil Interposing Relays			
Resistor Value	**Shunt I**	**Power Dissipation**	**Minimum Wattage**
15 KΩ	16 mA	3.84 W	10 W
12 KΩ	20 mA	4.80 W	10 W
10 KΩ	24 mA	5.76 W	12.5 W
9.1 KΩ	26.4 mA	6.33 W	12.5 W
8.2 KΩ	29.3 mA	7.03 W	20 W
7.5 KΩ	32 mA	7.68 W	20 W

Table A-2 Resistor Selection for 240 Vac Coil Interposing Relays

■ **NOTE:** The values of resistor dissipation in the Tables are based on steady-state applied voltages. This condition only occurs when the relays are being energized by the Raise or Lower outputs of the control. Therefore, the minimum rated resistor wattages are conservative, and minimal residual heating should occur, due to the low duty cycle experienced during normal operation.

Defective Interposing Relays

If resistance values lower than those listed in the Tables, are needed to eliminate buzz or chatter, the relay may be defective. AC coil relays typically have a "Magnetic Shunt" placed in close proximity to the relay coil core, to eliminate the tendency of the relay to buzz. This shunt is often a thin piece of metal in the shape of the letter "D" or "O". It acts as a "shorted turn", which changes the phase relationship between the voltage and current waveforms in the coil, such that the relay armature is delayed slightly from dropping out. When the relay does drop out, the voltage waveform is increasing in the opposite direction, and holds the armature in place for the next half-cycle, thereby quieting the relay.

To identify a defective relay, remove the relay from its socket and "shake" it to listen for any rattle. This could indicate a dislodged Magnetic Shunt. In a recent case, a 120 Vac relay needed a 1 KΩ resistor to quiet its operation. When the relay was removed and shaken, there was a noticeable rattle, indicating a probable defect. Replacing the relay resolved the issue.

Please contact Customer Technical Support at 727-544-2326 or email support@beckwithelectric.com for additional information and assistance.

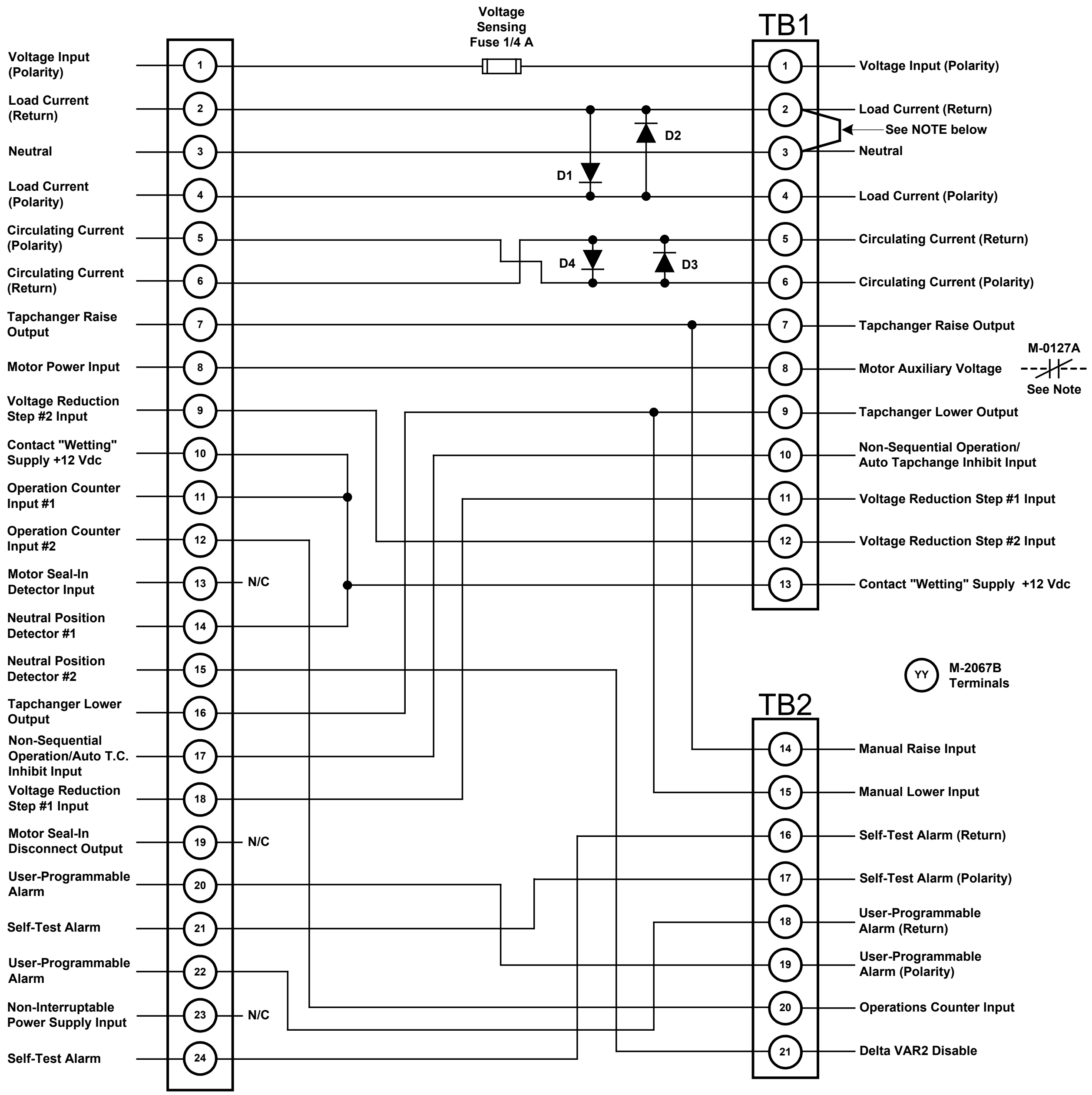

■ **NOTE:** If the M-0127A is used, connect output in series with common motor power.

Figure A-1 M-2067B Adapter Panel External Connections

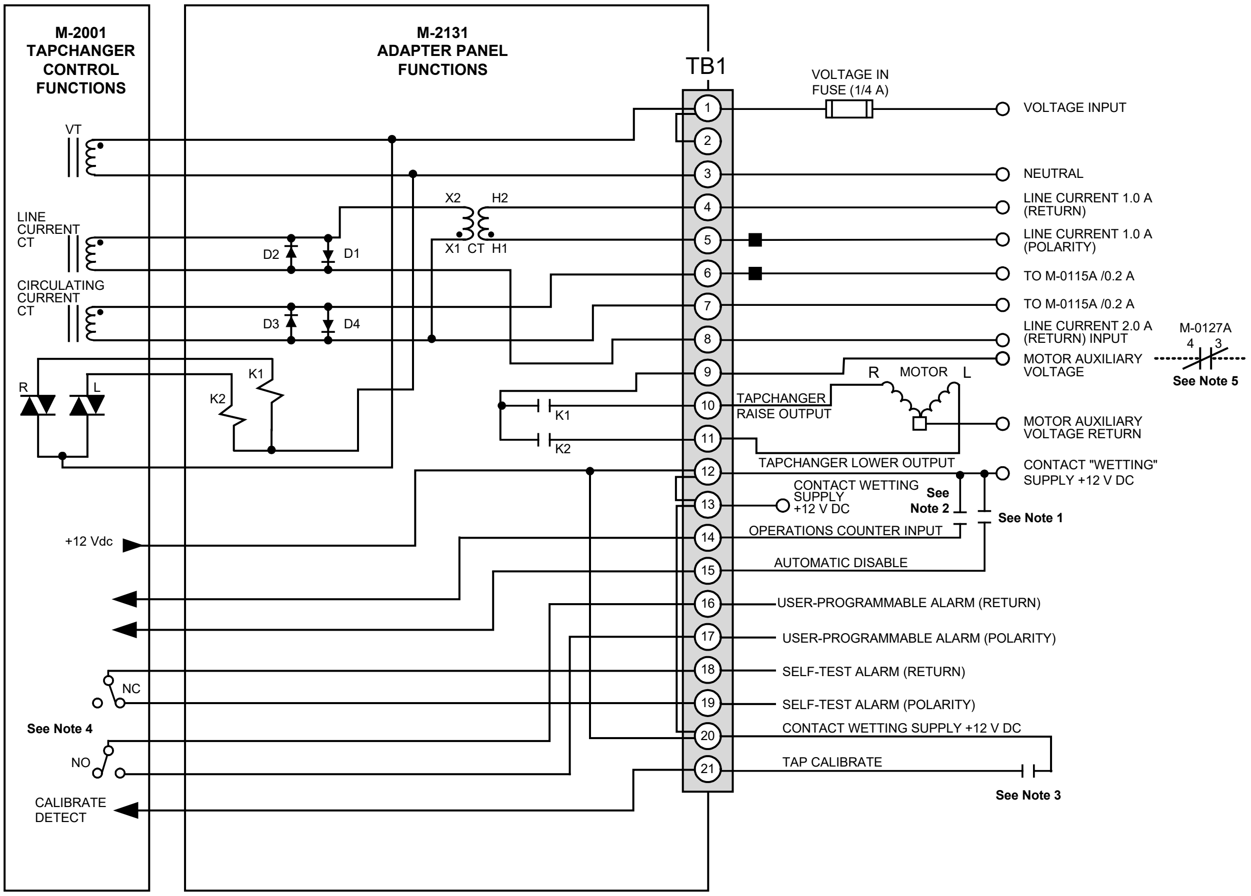

■ **NOTES:**

1. For manual operation, connect TB 1-15 to TB 1-12 before initiating external manual operation.
2. For counter operation, connect TB 1-14 to neutral TB 1-12 through an external dry contact.
3. For neutral position detect, connect TB 1-20 to TB 1-21 through an external dry contact.
4. The self-test alarm and user-programmable alarm contacts are shown in the de-energized state (no voltage applied). The self-test alarm contacts open after the M-2001 passes the self-test; the user-programmable alarm contacts close when an alarm is recognized.
5. If the M-0127A is used, connect output in series with common motor power.

WARNING: In no case should the line current circuit be interrupted with the regulator or transformer energized. Verify that the shorting diodes (located between K2-1 and K2-3) are installed between CT-X1 and CT-X2. Do not unplug the M-2001 Tapchanger Control if these diodes are not installed.

Figure A-2 M-2131B Adapter Panel External Connections

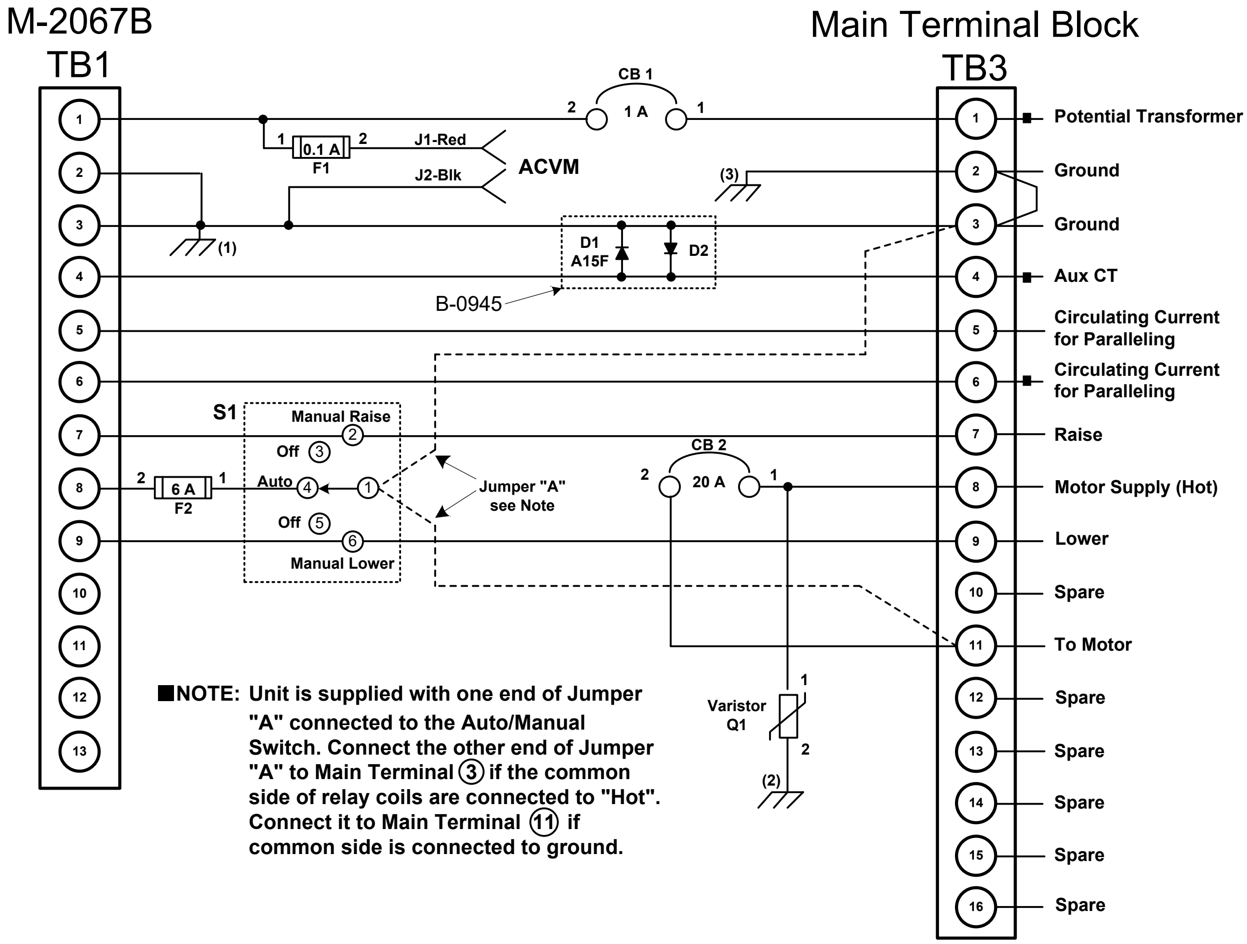

■**NOTE:** Unit is supplied with one end of Jumper "A" connected to the Auto/Manual Switch. Connect the other end of Jumper "A" to Main Terminal ③ if the common side of relay coils are connected to "Hot". Connect it to Main Terminal ⑪ if common side is connected to ground.

Figure A-3 M-2174B Adapter Panel External Connections

NOTE: TB1 Terminal Positions are illustrated in numerical order. See Note below.

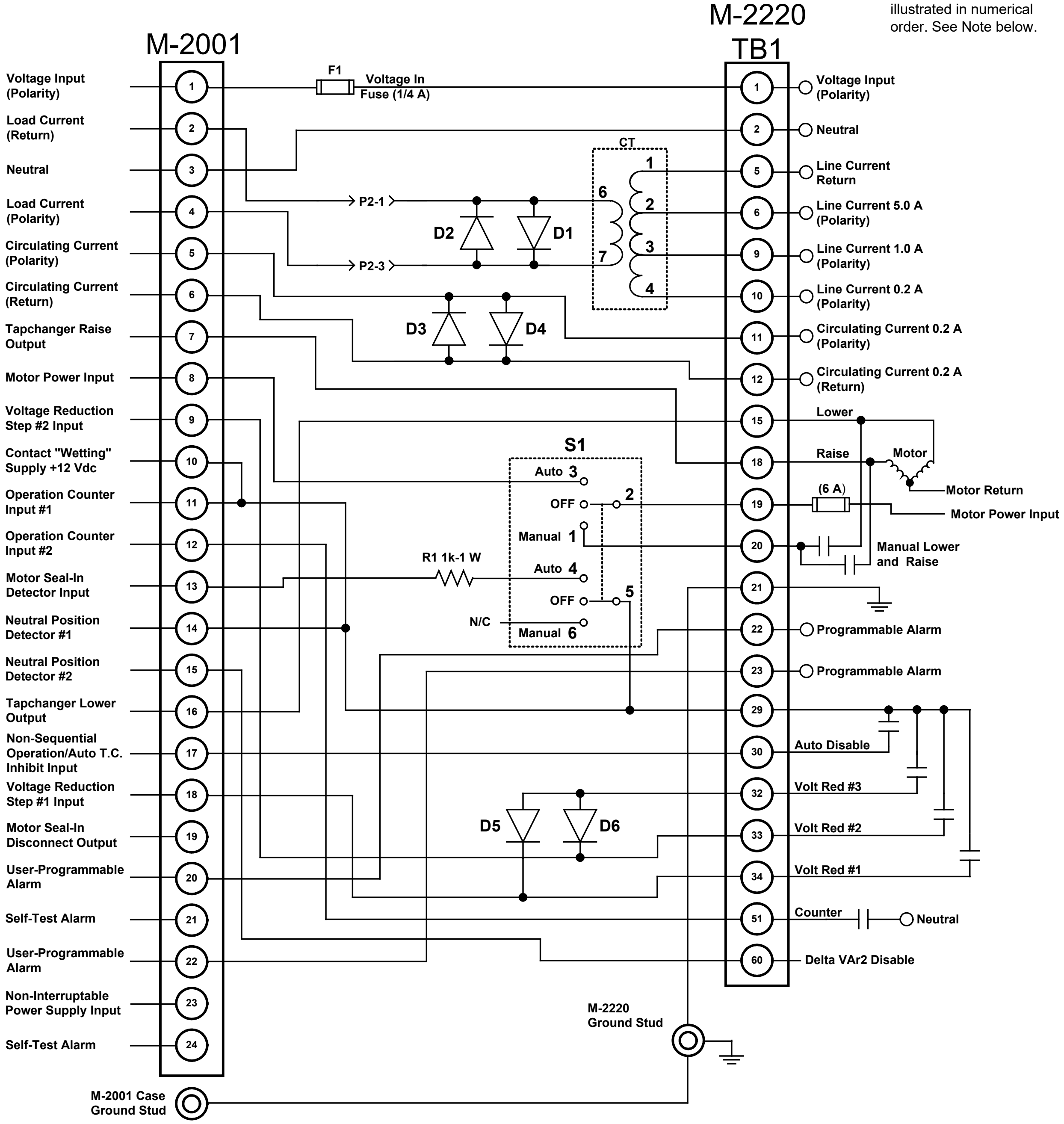

■ **NOTE:** TB1 Terminal Block physical locations are illustrated below.

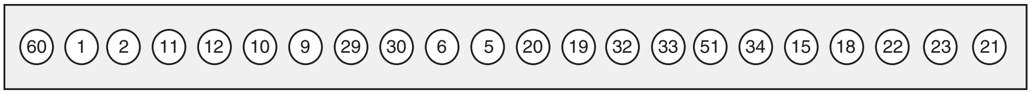

Figure A-4 M-2220 Adapter Panel External Connections

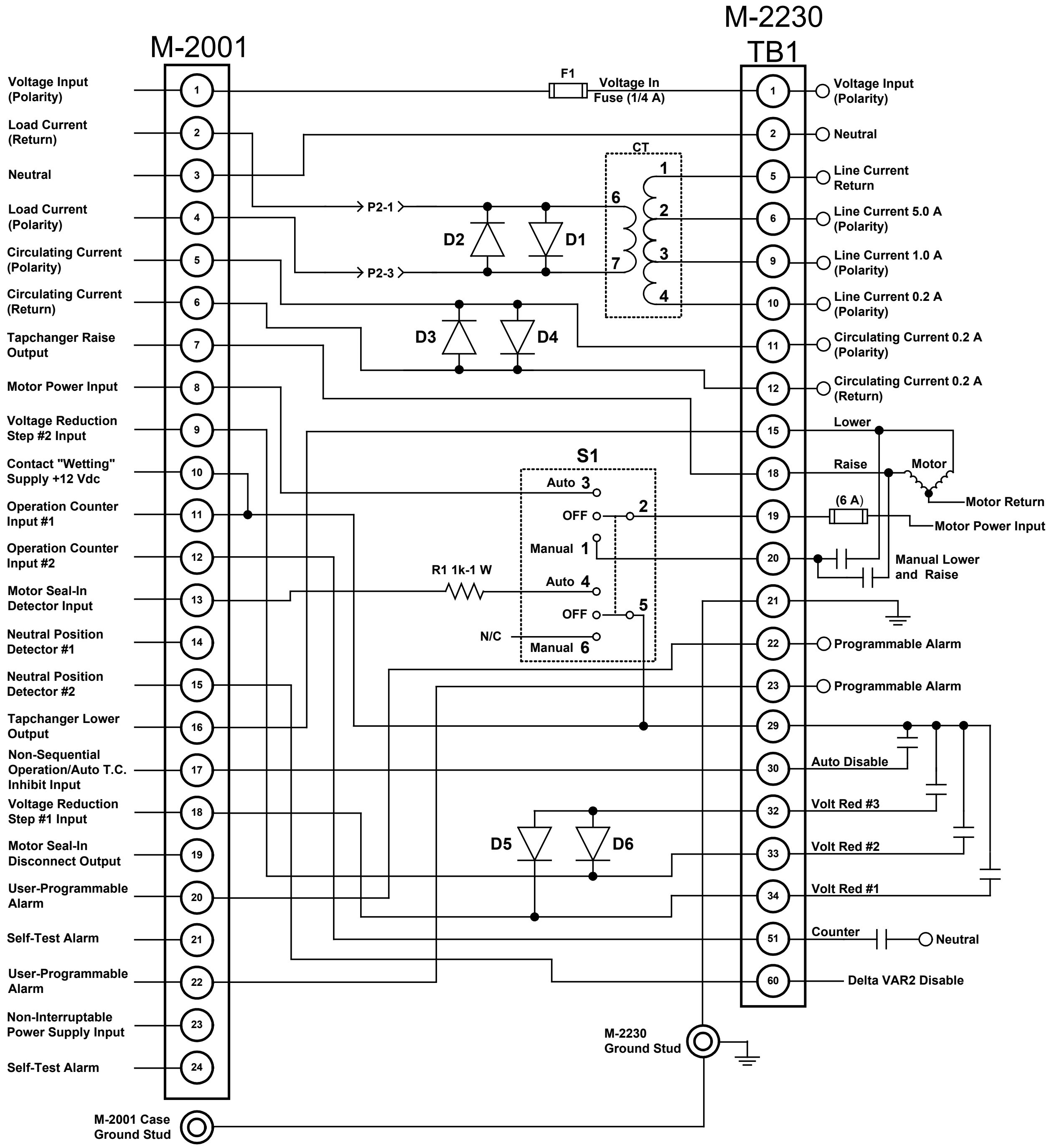

Figure A-5 M-2230 Adapter Panel External Connections

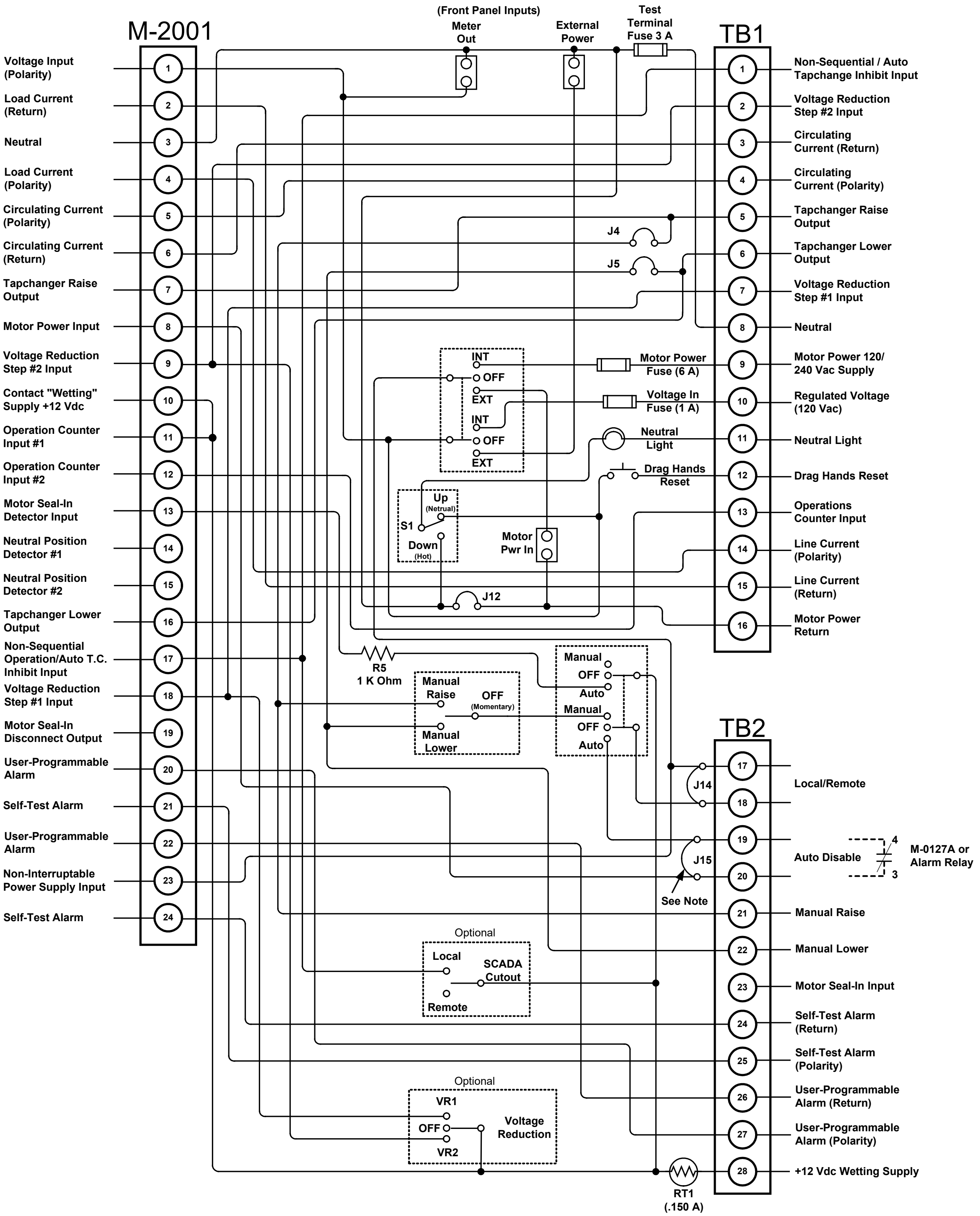

■ **NOTE:** If the M-0127A is used, remove J15 Jumper and connect output contact.

Figure A-6 M-2270B Adapter Panel External Connections

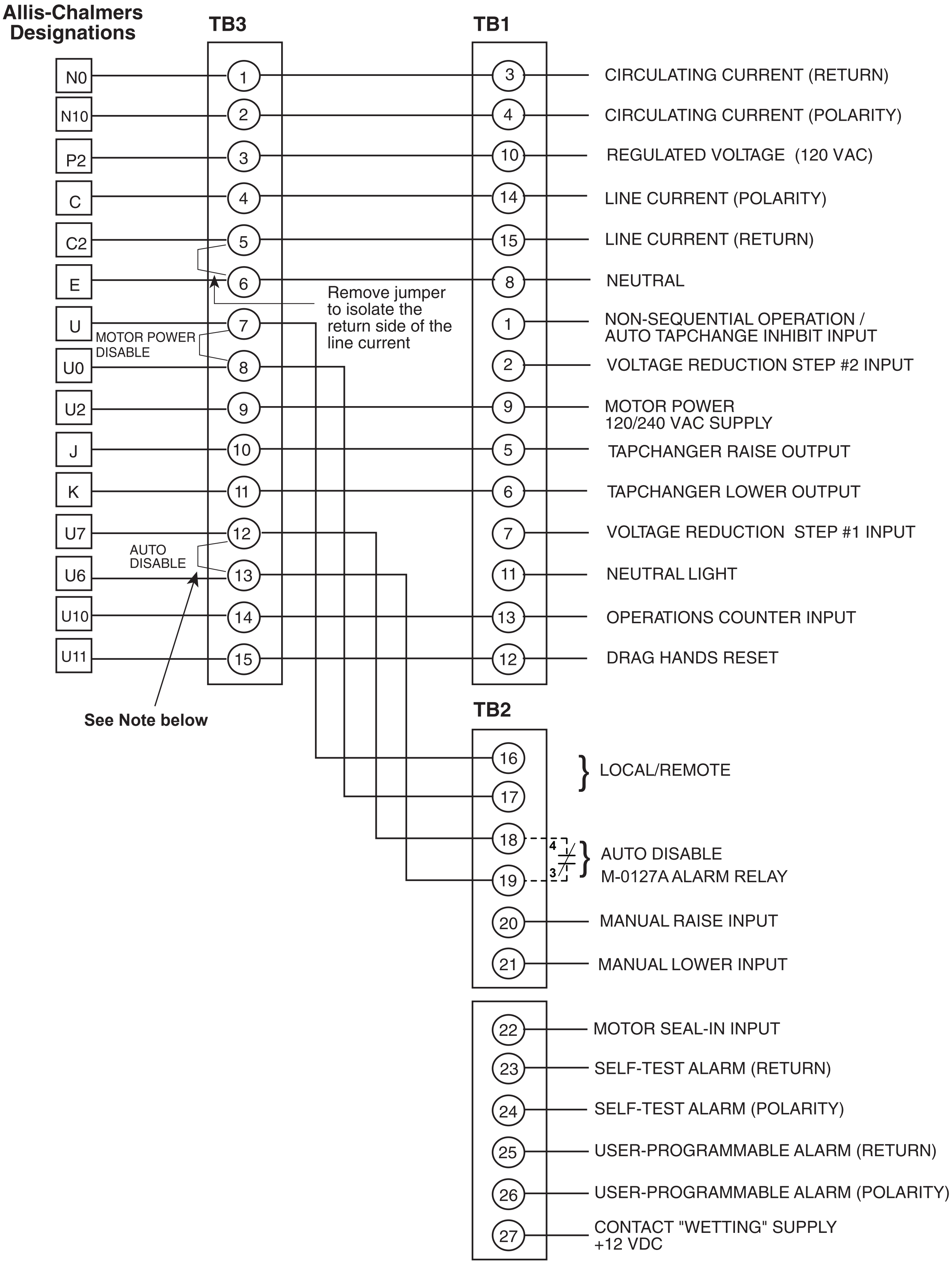

■ **NOTE:** If the M-0127A is used, remove Jumper and connect output contact. Also, remove J15.

Figure A-7 M-2278 Adapter Panel External Connections

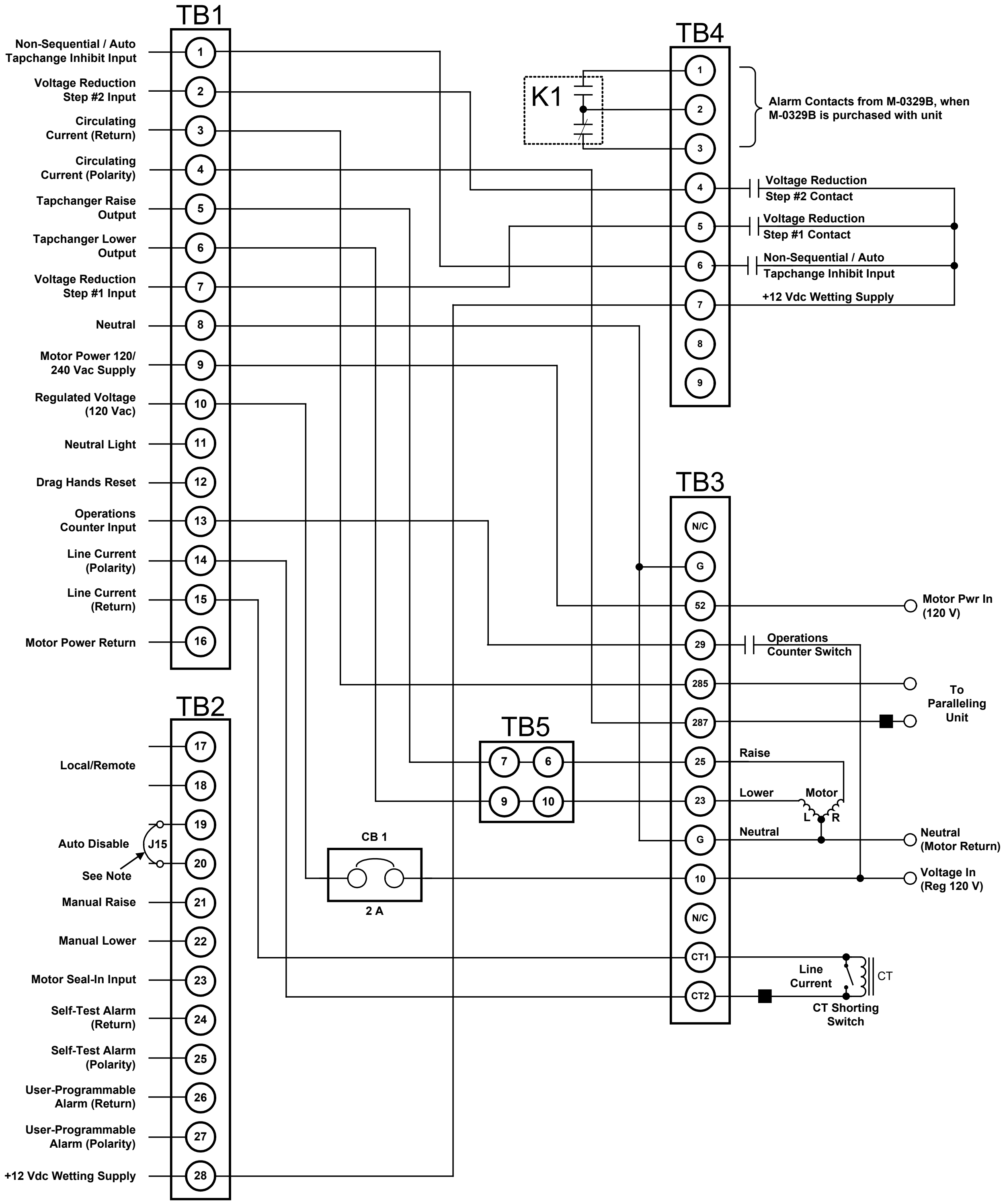

■ **NOTE:** If the M-0127A is used, remove J15 Jumper and connect output contact.

Figure A-8 M-2279D Adapter Panel External Connections

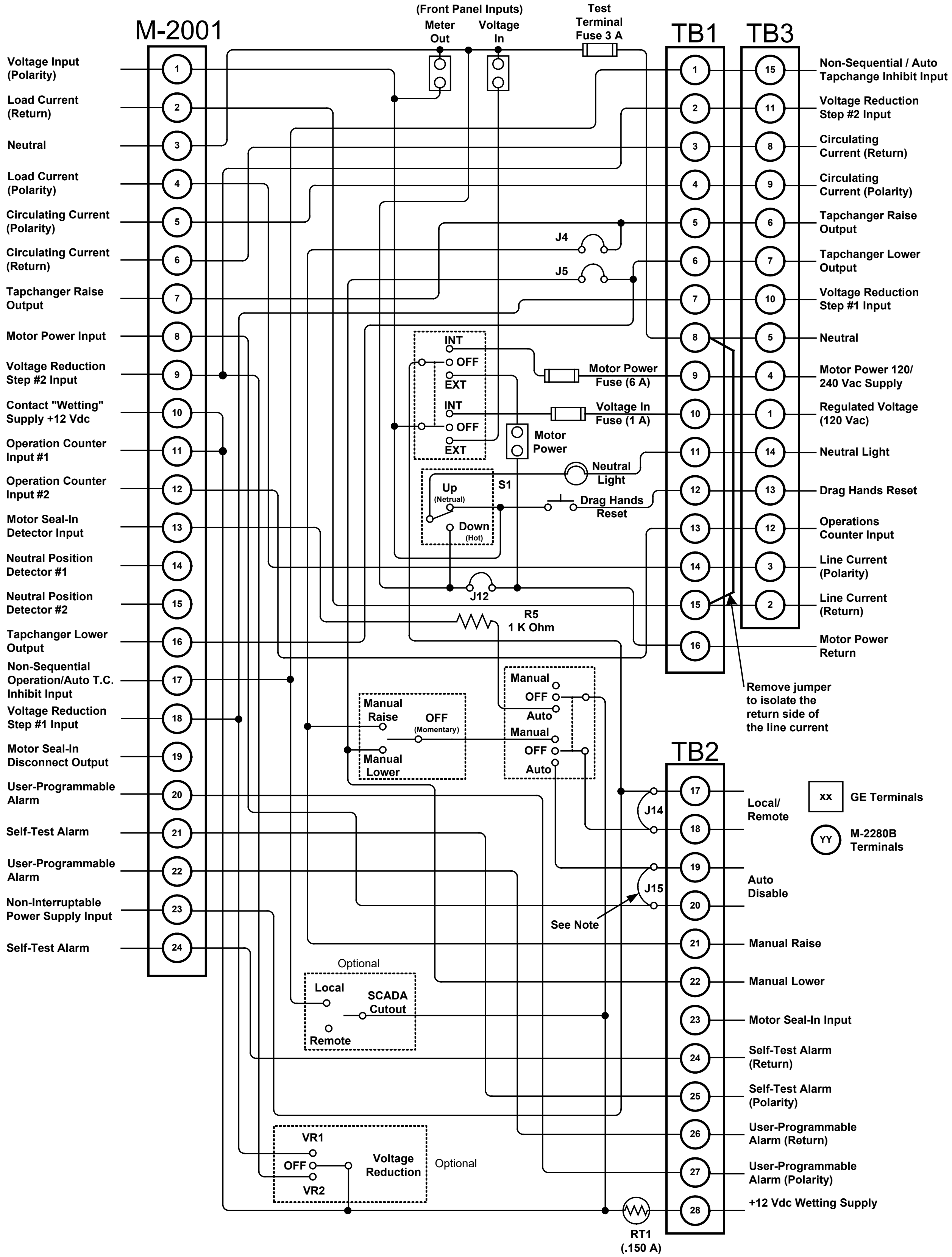

■ **NOTE:** If the M-0127A is used, remove J15 Jumper and connect output contact.

Figure A-9 M-2280B Adapter Panel External Connections

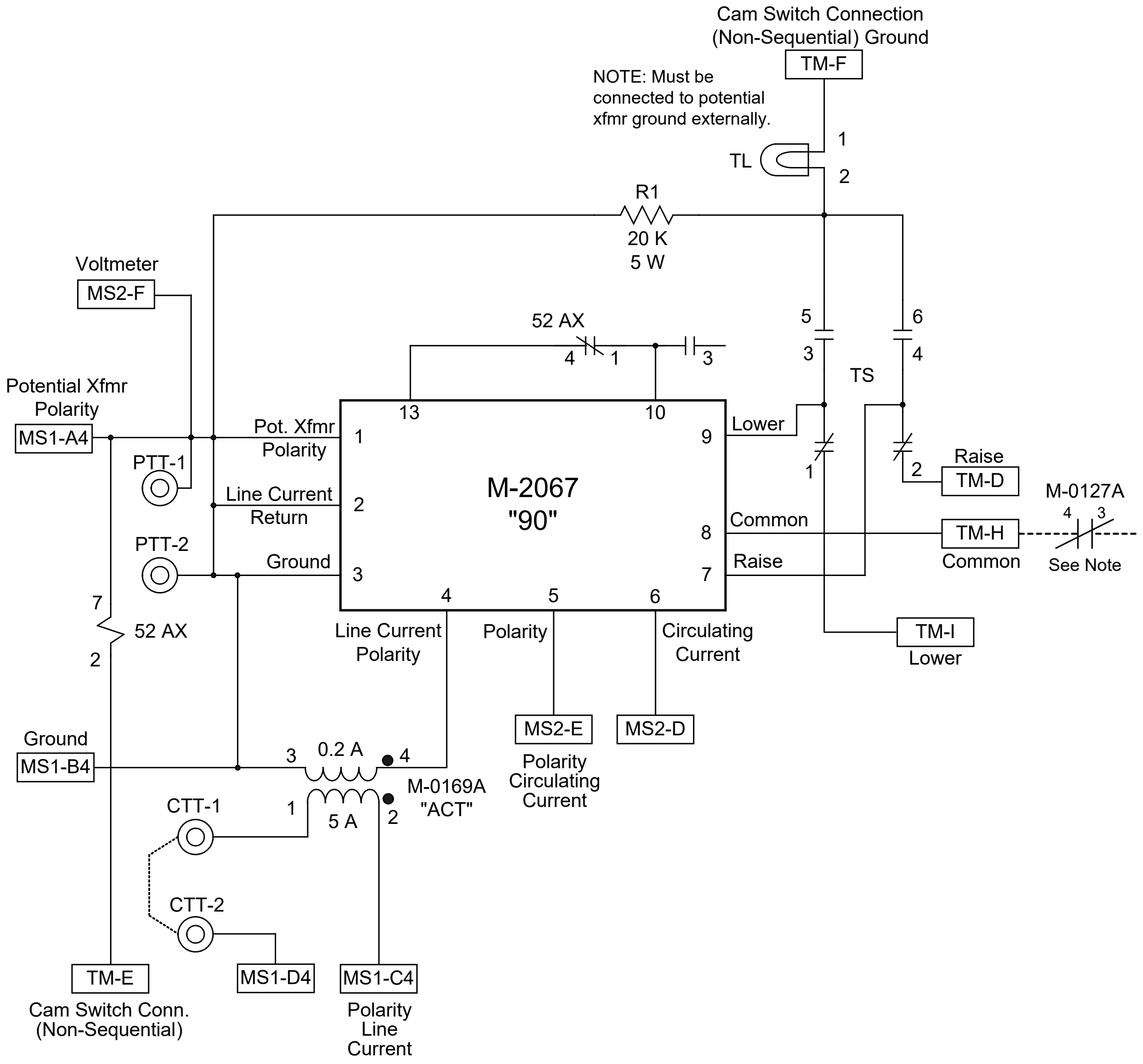

■ **NOTE:** If the M-0127A is used, connect output in series with common motor power.

Figure A-10 M-2286 Adapter Panel External Connections

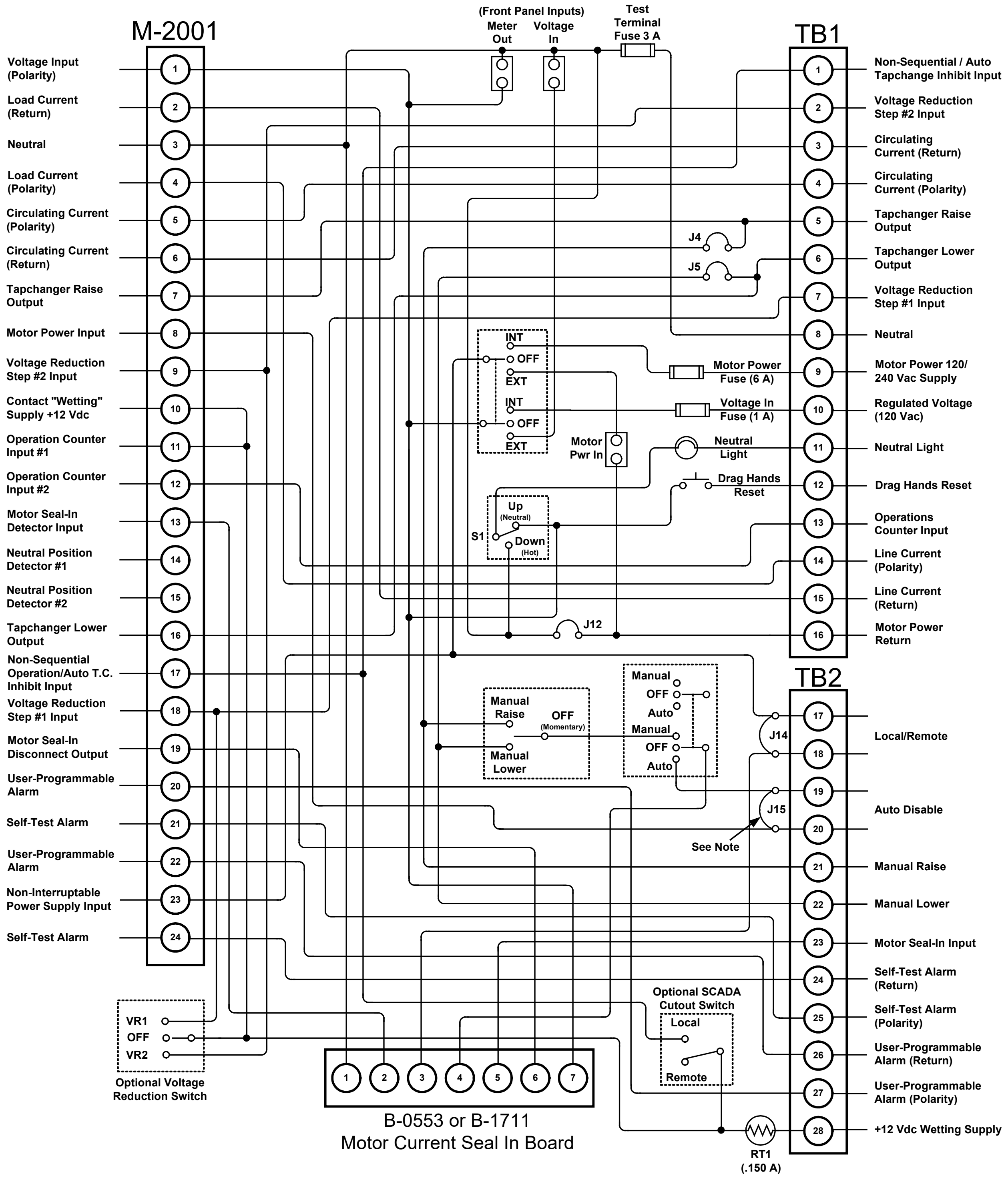

■ **NOTE:** If the M-0127A is used, remove J15 Jumper and connect output contact.

Figure A-11 M-2324C Adapter Panel External Connections

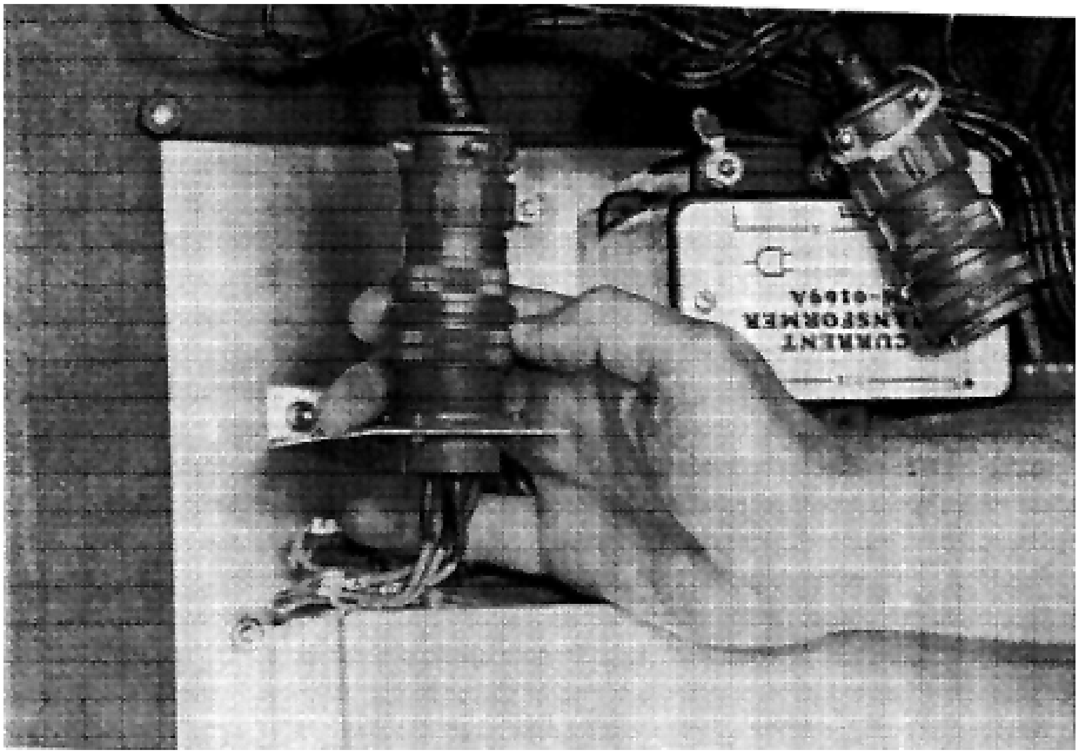

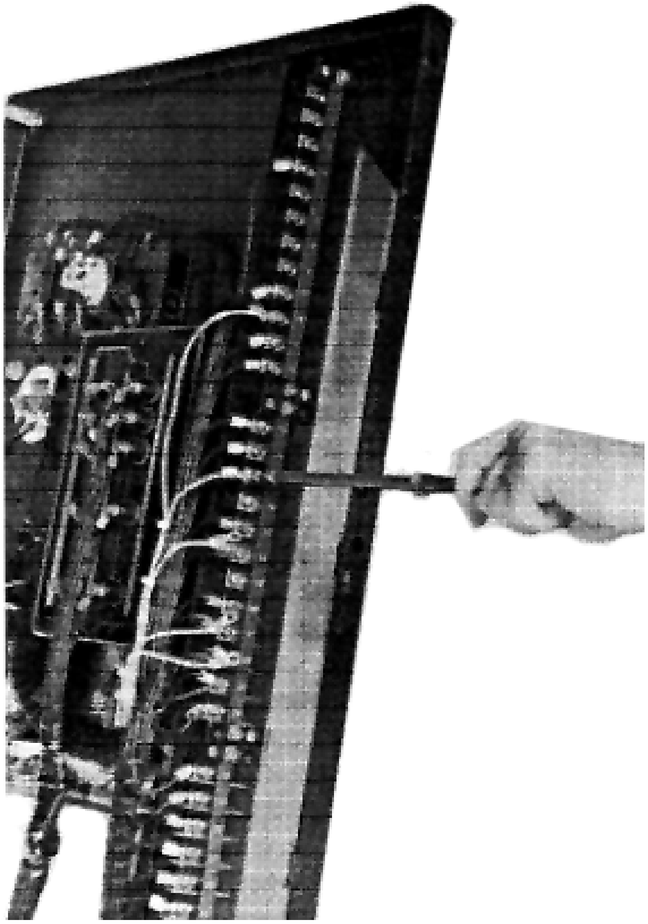

Attach the female end of the 4-position shorting plug to the male end that is mounted on the M-2326 flange. Using a cable tie, secure the 8-position shorting plug to the wiring harness.

Attach the M-2326 wiring harness to the existing terminal block. The M-2326 cable harness has wire markers that match the numbers on the terminal block.

Figure A-12 M-2326 Adapter Panel External Connections

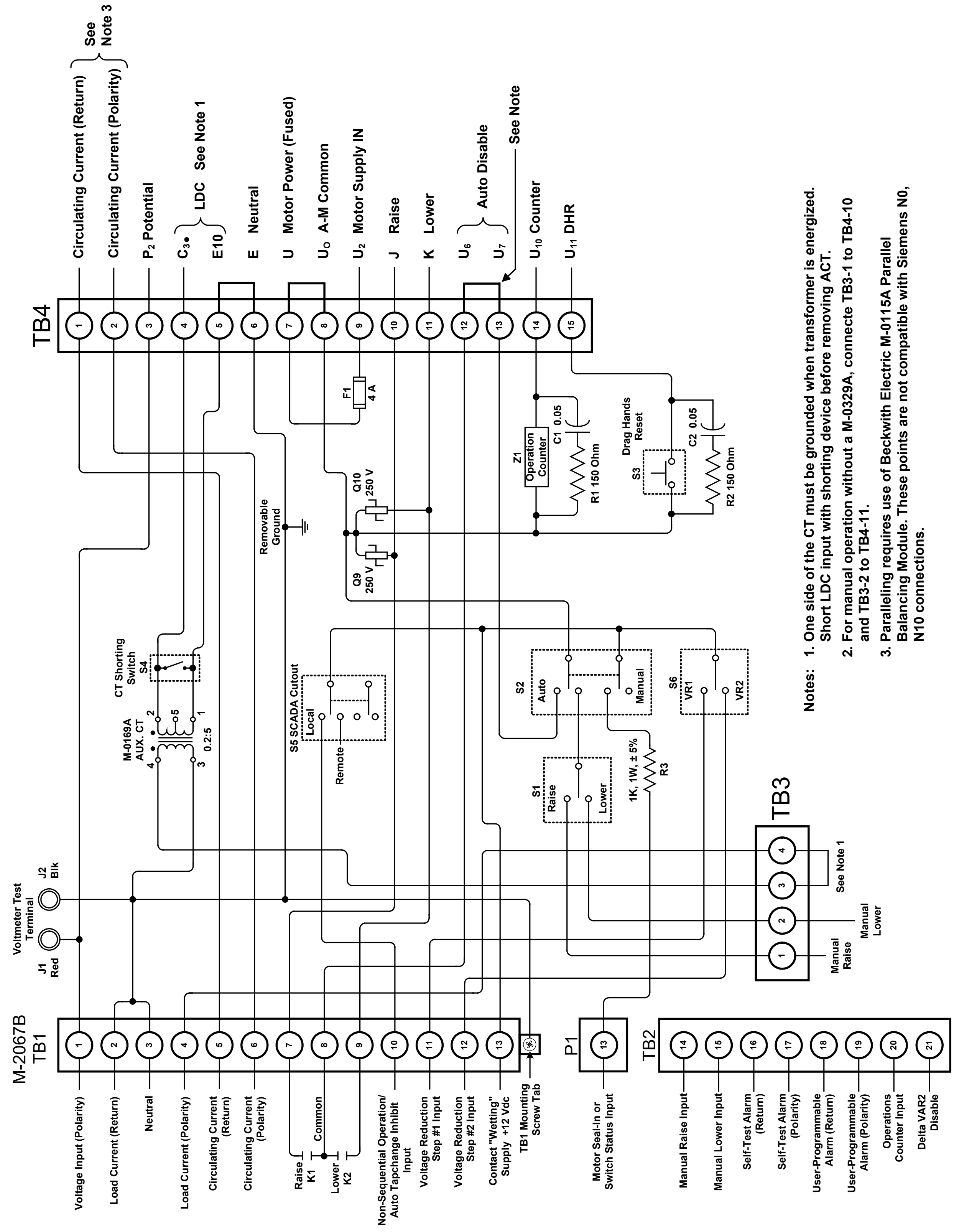

Notes:
1. One side of the CT must be grounded when transformer is energized. Short LDC input with shorting device before removing ACT.
2. For manual operation without a M-0329A, connecte TB3-1 to TB4-10 and TB3-2 to TB4-11.
3. Paralleling requires use of Beckwith Electric M-0115A Parallel Balancing Module. These points are not compatible with Siemens N0, N10 connections.

■ **NOTE:** If the M-0127A is used, remove Jumper and connect output contact.

Figure A-13 M-2339 Adapter Panel External Connections

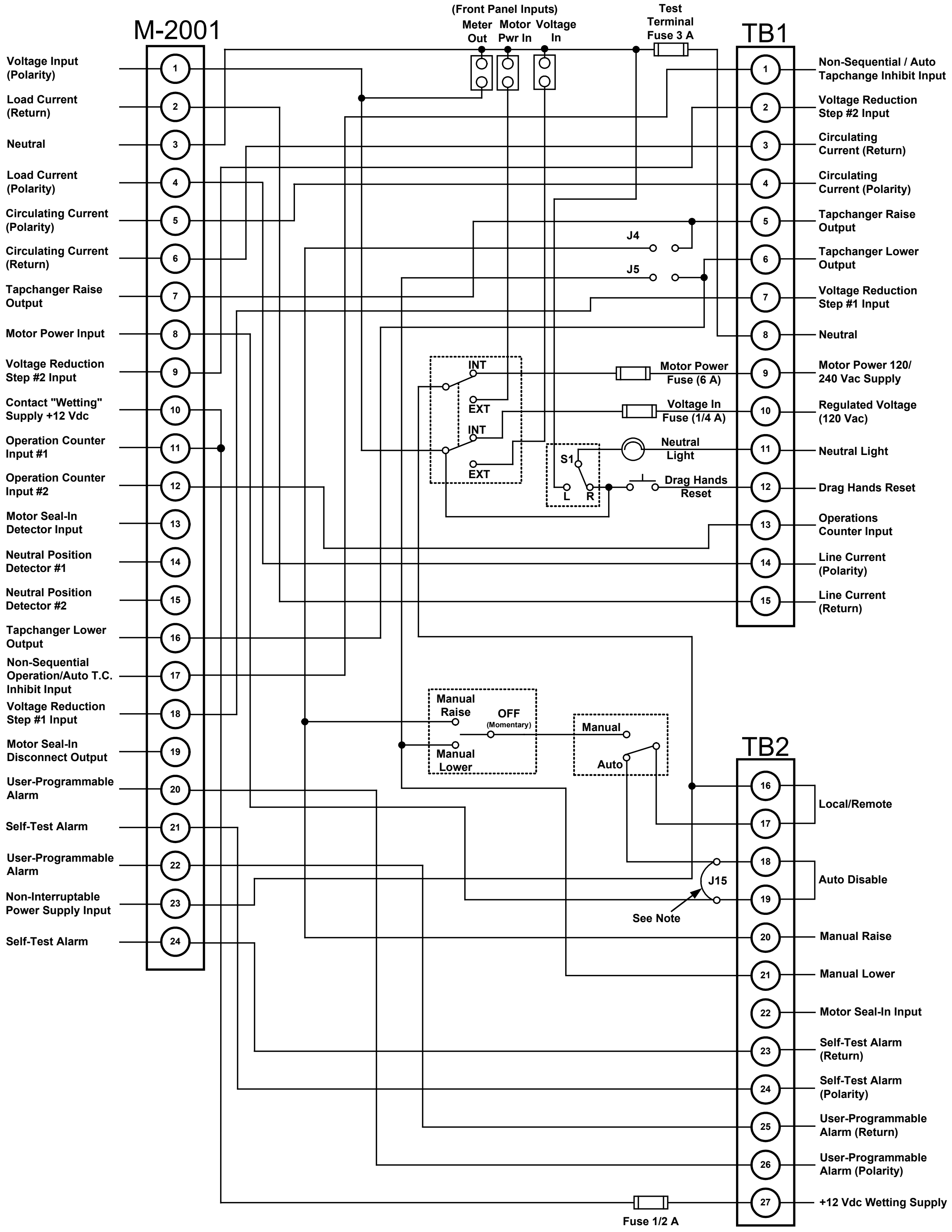

■ **NOTE:** If the M-0127A is used, remove Jumper and connect output contact. Also, remove J15.

Figure A-14 M-2347 Adapter Panel External Connections

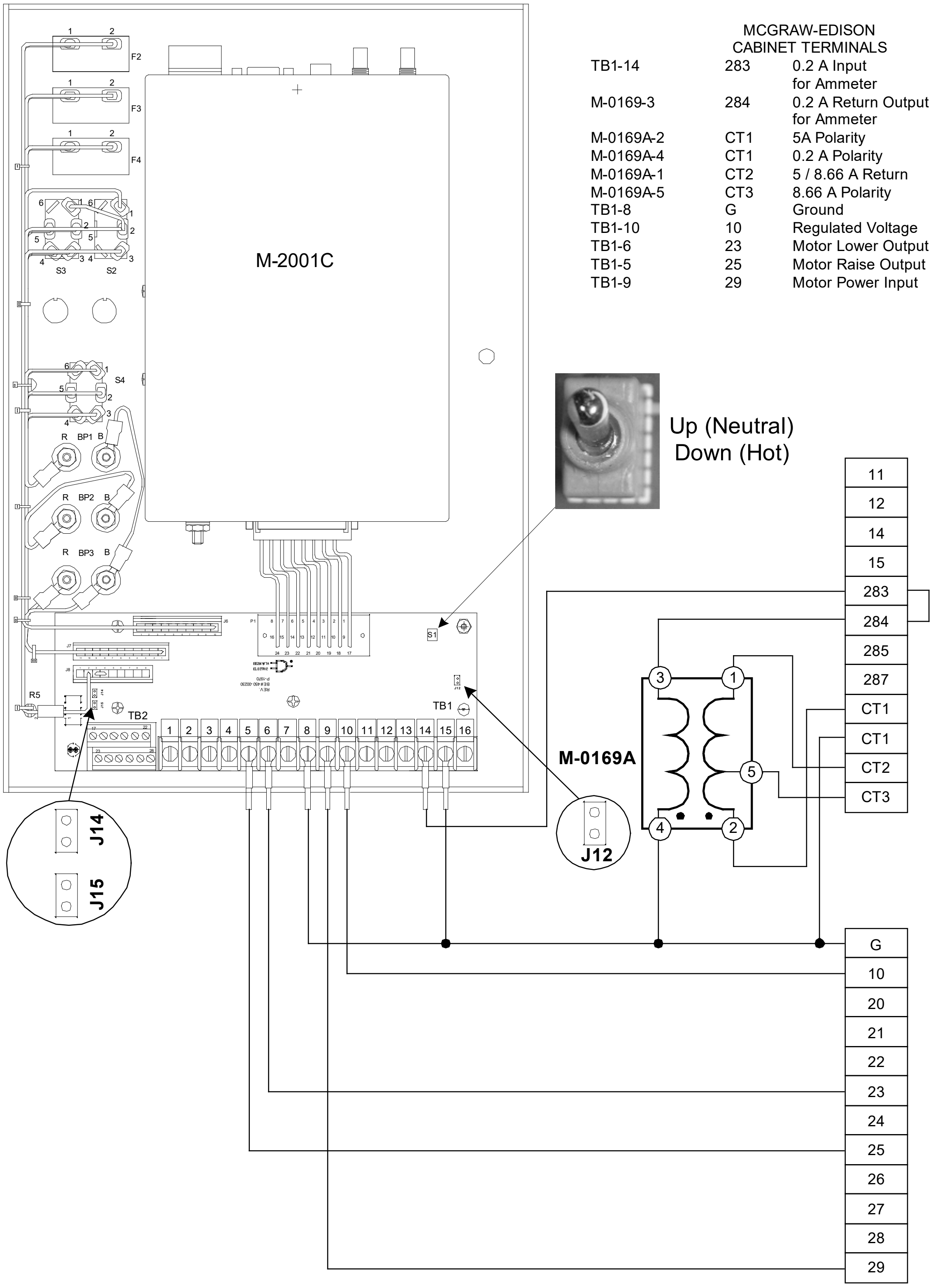

	MCGRAW-EDISON CABINET TERMINALS	
TB1-14	283	0.2 A Input for Ammeter
M-0169-3	284	0.2 A Return Output for Ammeter
M-0169A-2	CT1	5A Polarity
M-0169A-4	CT1	0.2 A Polarity
M-0169A-1	CT2	5 / 8.66 A Return
M-0169A-5	CT3	8.66 A Polarity
TB1-8	G	Ground
TB1-10	10	Regulated Voltage
TB1-6	23	Motor Lower Output
TB1-5	25	Motor Raise Output
TB1-9	29	Motor Power Input

■ **NOTE:** If the M-0127A is used, connect to TB2-19 & 20 and remove J15 Jumper output contact.

Figure A-15 M-2354C Adapter Panel External Connections

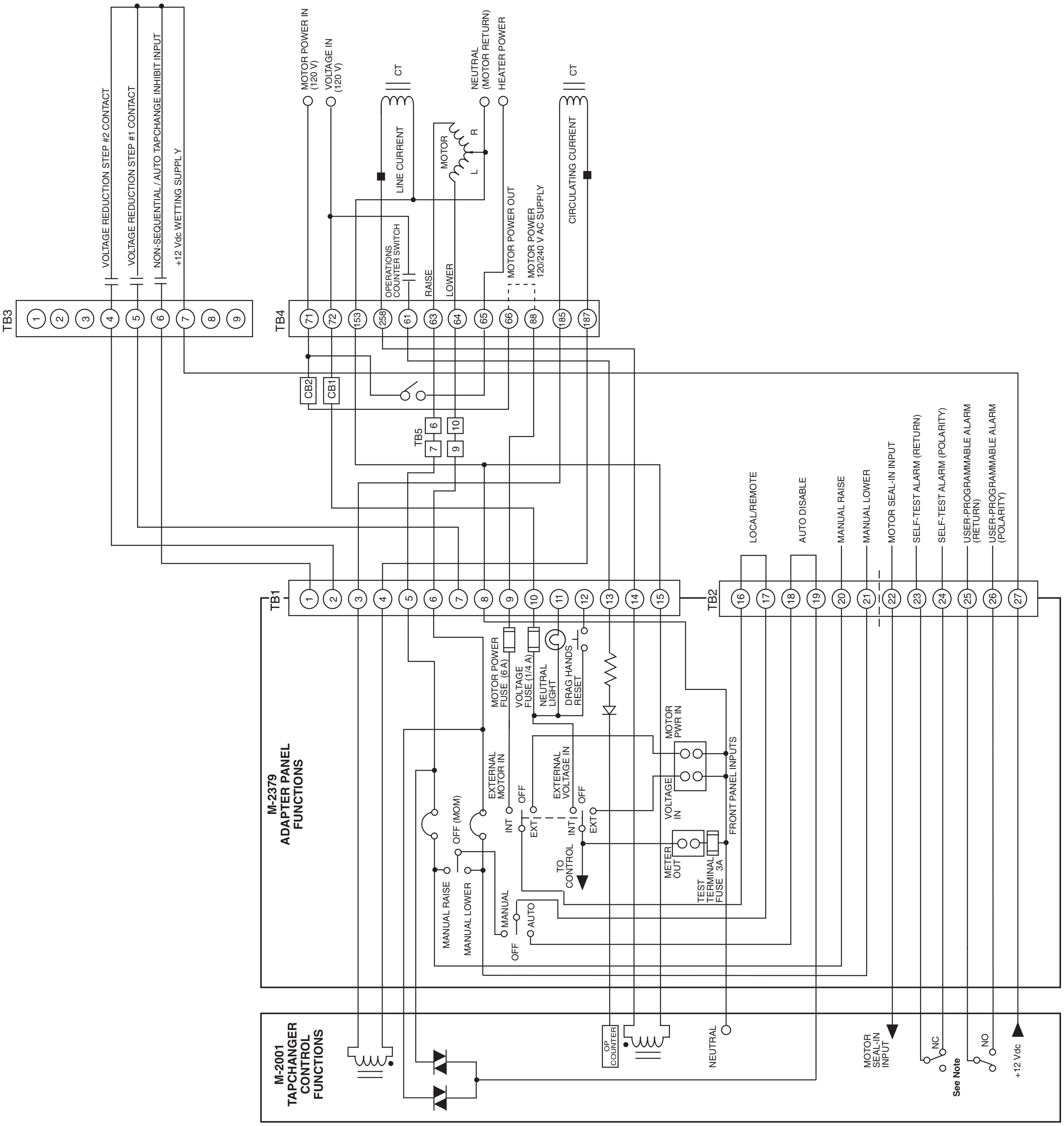

■ **NOTE:** If the M-0127A is used, remove Jumper and connect output contact.

Figure A-16 M-2379D Adapter Panel External Connections

This Page Left Intentionally Blank

B Paralleling Equipment Specifications

This Appendix contains the following product Specification sheets that provide mechanical specs and additional product specific information:

- **M-0169A Auxiliary Current Transformer**
- **M-0329B LTC Backup Control**
- **M-2026 Backup Power Supply**
- **M-2027 Backup Power Supply**
- **M-0115A Parallel Balancing Module**
- **M-0127A/M-0170A AC Current Relay**

Product Specifications can also be obtained from our website www.beckwithelectric.com.

This Page Left Intentionally Blank

BECKWITH ELECTRIC

CONTROLS

Auxiliary Current Transformer Units
M-0121
M-0169A

M-0121
For use with Beckwith Electric Tapchanger Controls when there is no additional burden present.

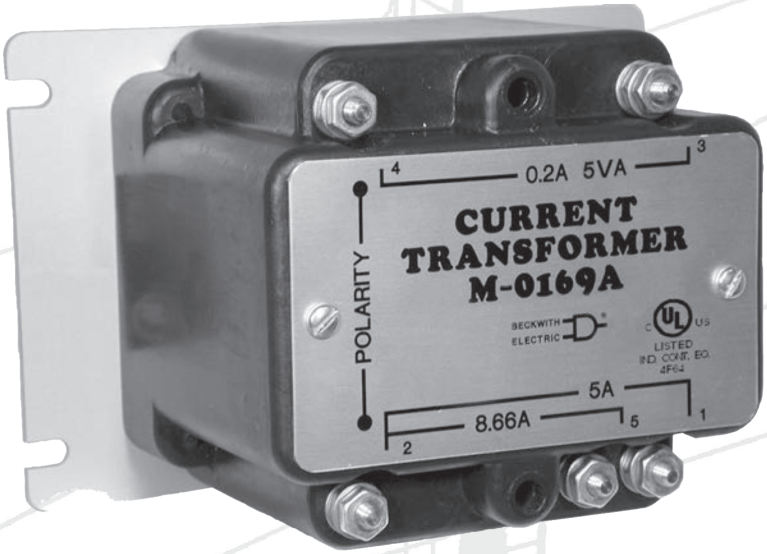

M-0169A
For use in higher burden current circuits, such as those found in paralleling schemes. Output is protected against overvoltage.

HUBBELL®

Line Current, used for Line Drop Compensation, is provided by an Auxiliary Current Transformer. The current transformer drops the line current to a 0.2 A full scale rating. The M 0121 or M 0169A can be used for CTs with a 5 A secondary. The M 0169A can be used for CTs with either a 5 A or 8.66 A secondary.

Input

M-0121: Nominal 5 A current transformer circuit.

M-0169A: Nominal 5 A or 8.66 A current transformer circuit.

Output

Nominal 0.2 A ±5%, linear to 0.4 A.

Output Rating

M-0121: (into M-0067 terminals 3 to 4 or 5 to 6) 0.1 VA, 0.2 A current.

M-0169A: 5 VA, 0.2 A current.

Input Current Withstand		Maximum Time
8.66 A (M-0169A Only)	5 A (Either Unit)	
216 A	125 A	2 sec.
173 A	100 A	3 sec.
142 A	82 A	4 sec.
125 A	72 A	5 sec.
17 A	10 A	Continuous

HI POT: 1500 Vac rms. Primary to secondary and either to case.

Mounting Dimensions

M-0121: 5" x 2-1/8" (12.7 cm x 5.1 cm), 4 holes, 7/32" (0.6 cm) diameter.

M-0169A: 5-5/8" x 3" (14.3 cm x 7.6 cm), 4 holes, 7/32" (0.6 cm) diameter.

Compliance

cULus-Listed per 508 – NMTR.E155037 Industrial Control Equipment
– NMTR7.E155037 Industrial Control Equipment Certified for Canada
CAN/USA C22.2 No. 14-M91

Terminal Block Connections/Torque Requirements

M-0121: The wire should be No. 16–14 AWG inserted in an AMP #324915 (or equivalent) connector, and both screws tightened to 16 inch-pounds (1.8 N m) torque.

M-0169A: The wire should be No. 12 AWG inserted in an AMP #35109 (or equivalent) connector, and both screws tightened to 20 inch-pounds (2.26 N m) torque.

Approximate Weight

M-0121: 1 lb (0.45 kg)

M-0169A: 2.5 lbs (1.1 kg)

Approximate Shipping Weight

M-0121: 2 lbs (0.9 kg)

M-0169A: 3.5 lbs (1.6 kg)

Warranty

M-0121 and M-0169A units are covered by a five year warranty from date of purchase.

Specification is subject to change without notice.

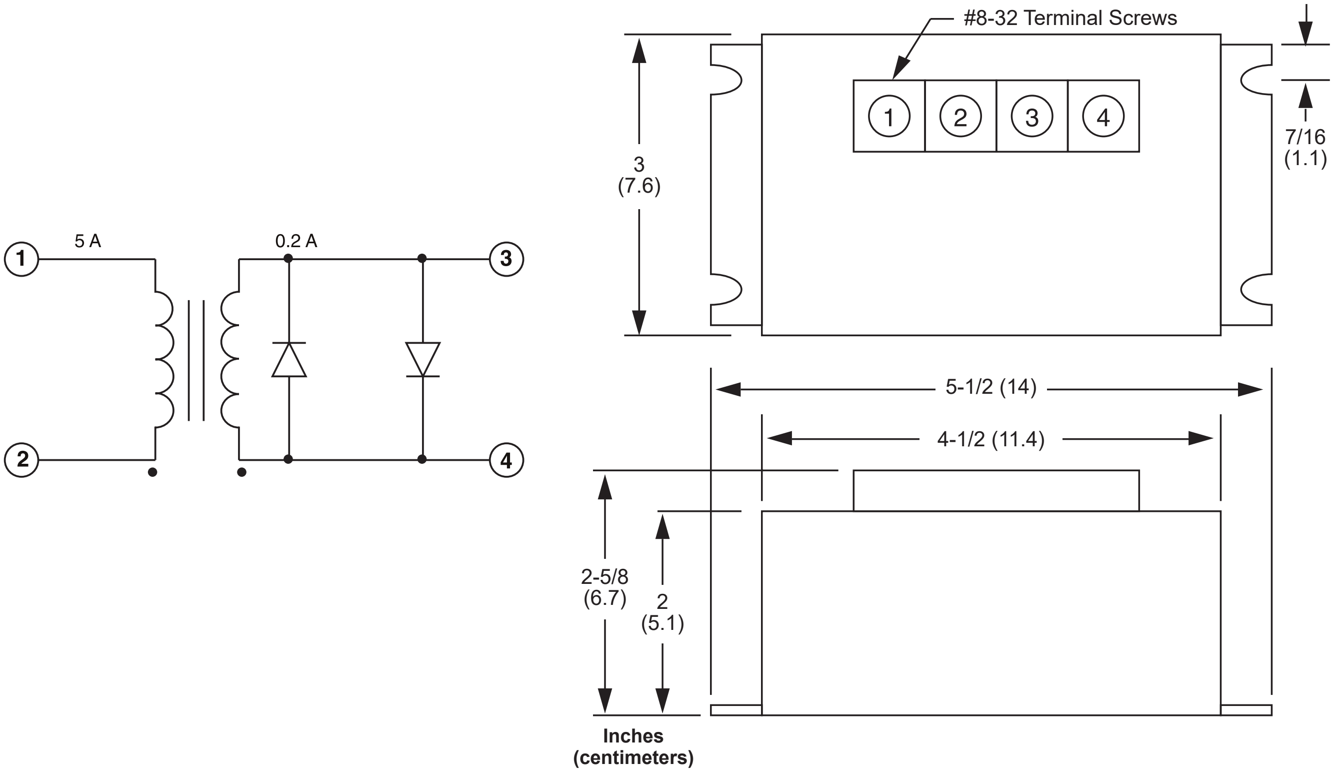

Figure 1 M-0121 Outline Dimensions

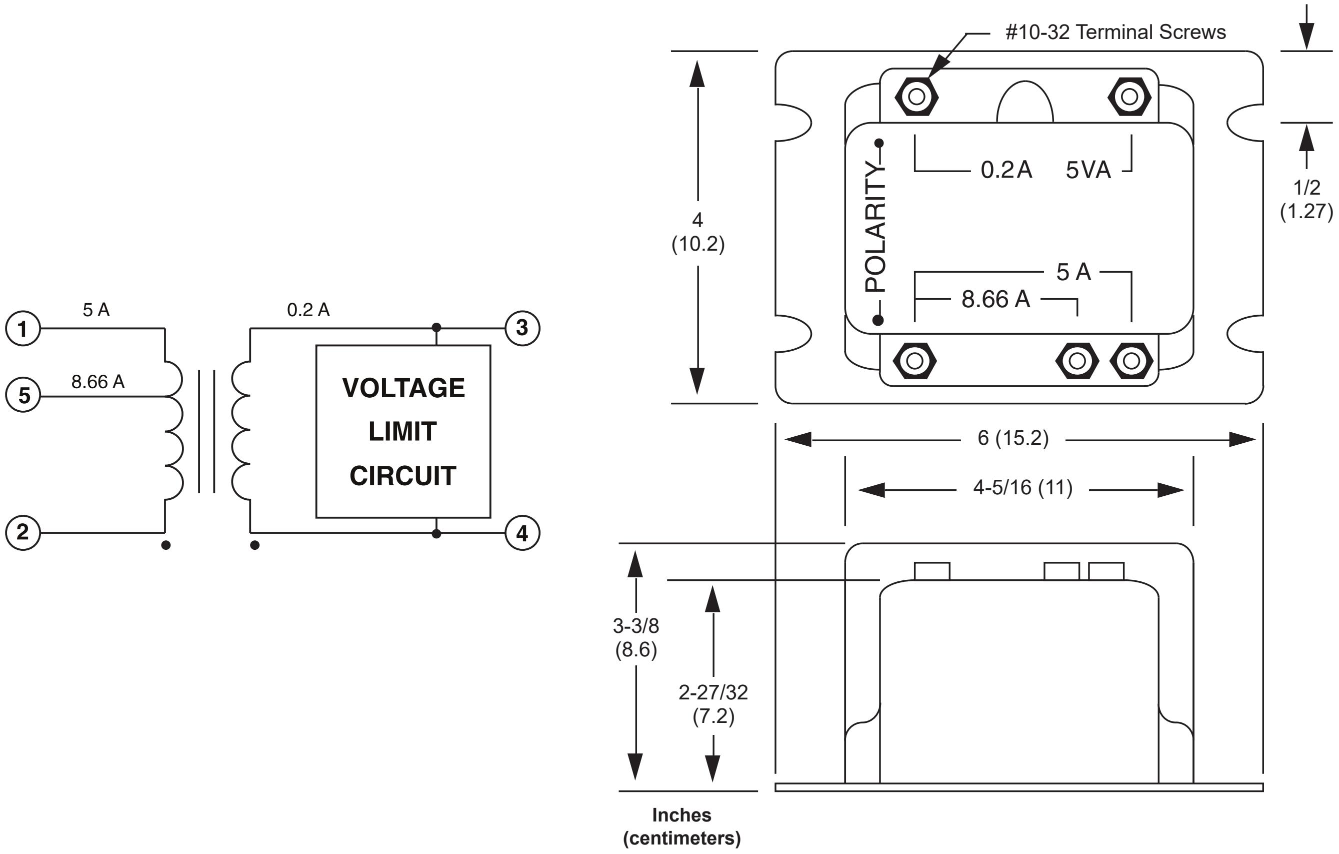

Figure 2 M-0169A Outline Dimensions

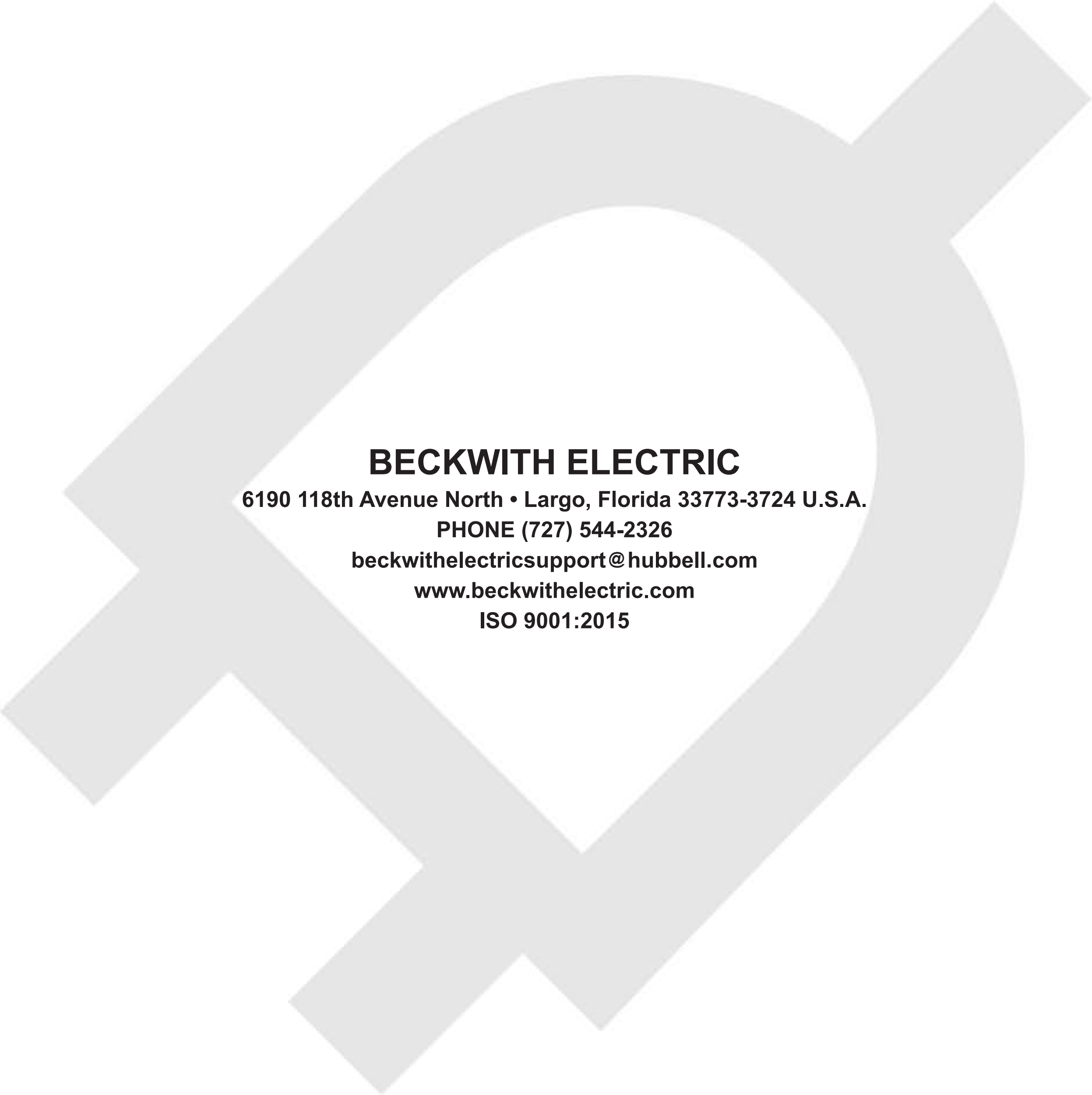

BECKWITH ELECTRIC
6190 118th Avenue North • Largo, Florida 33773-3724 U.S.A.
PHONE (727) 544-2326
beckwithelectricsupport@hubbell.com
www.beckwithelectric.com
ISO 9001:2015

A proud member of the Hubbell family.

© 1994 Beckwith Electric. All Rights Reserved.

BECKWITH
ELECTRIC

CONTROLS

LTC Backup Control
M-0329B

- **Prevents a defective LTC tapchanger control from running the voltage outside the upper or lower limits**
- **Prevents the line drop compensator from raising the voltage too high under full or overload conditions**
- **Fully transient protected and operates within ±1% voltage accuracy over a temperature range of -40° to +80° C**
- **Includes First Customer Protection**

HUBBELL®

Introduction

The M-0329B Backup Control offers reliable voltage protection from both improperly set and malfunctioning Tapchanger controls. The most common voltage error in setting tapchanger controls occurs when values of Line Drop Compensation are set in the tapchanger control that result in unexpectedly high voltage at the transformer due to higher than anticipated load currents.

Modern digital tapchanger controls typically offer Upper and Lower Voltage Limits in the form of Block Raise and Block Lower Setpoints, and can provide runback, as in the M-0329B. However, the M-0329B is a stand-alone, line voltage operated, analog device that keeps operating regardless of the condition of the main control's processor and/ or internal power supply.

The M-0329B has bandcenter and bandwidth settings, similar to the primary tapchanger control. In the majority of applications, the bandcenter should be set to the same numerical voltage value as the primary control. The bandwidth of the M-0329B should be set to at least twice the numerical value of the bandwidth setting of the primary control. The band edges of the M-0329B's bandwidth are the Upper and Lower Voltage Limits, (also known as Block Raise and Block Lower), beyond which, the M-0329B prohibits Raise and Lower commands from the primary control from energizing the tapchanger motor.

The M-0329B also has a "Deadband" setting. This is a voltage band of 1, 2, 3, or 4 Volts, and this value is selected by setting dip switches on the side of the M-0329B. The lower edge of the Deadband setting begins at the Upper Voltage Limit of the M-0329B. The upper edge of the Deadband is referred to as the "Voltage Runback Threshold". When the measured voltage exceeds this threshold due to load shedding or some other external event (the tapchanger is already blocked at this point), the M-0329B can issue its own Lower command. How quickly this occurs is determined by the time delay setting on the M-0329B, which is settable from 1 to 30 seconds. Once this Force Lower command is issued, the M-0329B will not cancel the command until the measured voltage is below the upper edge of the Deadband (Voltage Runback Threshold).

If, for some reason, the voltage remains above the Voltage Runback Threshold (an inoperative tapchanger), the M-0329B will time out for 180 seconds (3 minutes) and then close an Over-Voltage Alarm contact. It may be helpful in setting the M-0329B to adjust the bandwidth setting and Deadband such that the Voltage Runback Threshold matches the maximum allowed system voltage, so that the over-voltage alarm corresponds with the actual maximum value.

It is also helpful to consider setting the M-0329B bandwidth to accommodate the maximum amount of anticipated Voltage Reduction (if used). To accommodate the maximum voltage reduction and the maximum allowable voltage, it is sometimes necessary to skew the bandcenter setting of the M-0329B to accommodate both. Consult the factory if you are unsure how to determine the value for a skewed bandcenter.

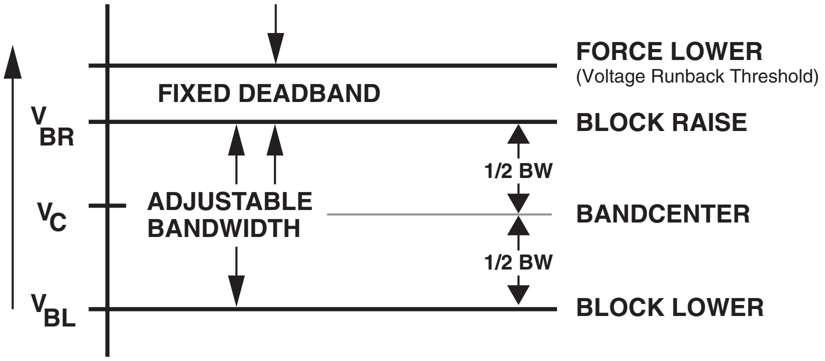

Figure 1 Voltage Level Setpoint Diagram

Features

Block Raise and Block Lower voltage levels are set by accurately calibrated **Bandcenter** and **BANDWIDTH** controls, similar to those found on LTC transformer controls.

BLOCK RAISE/LOWER and **LOWER** LEDs indicate backup control status.

Block Raise, Block Lower, Lower and Alarm contacts provide outputs to drive external components.

Inputs

Power: 90 to 140 Vac, 50/60 Hz, 2 W at 120 Vac

Voltage: Less than 0.2 VA burden at 120 Vac input

Front Panel Controls

BANDWIDTH VOLTS: An accurately calibrated dial adjusts the bandwidth between Block Raise and Block Lower from 6 V to 24 V for 120 Vac.

BANDCENTER VOLTS: An accurately calibrated dial adjusts the Bandcenter from 100 V rms to 140 V rms which allows the M-0329B to operate with most transformer controls.

TIME DELAY SECONDS: Adjustable from 1 to 30 seconds. If the voltage remains above the Block Raise Limit setting longer than the Time Delay setting, the M-0329B will initiate a tapchanger operation to lower the voltage. The Block Raise Limit is defined as the Block Raise setting plus the Deadband value.

Selectable Deadband: The deadband is the voltage range above the Block Raise Level where no tapchanger raise operation will take place. In the M-0329B, it is selectable as 1, 2, 3, or 4 V rms. When the measured voltage is above the Block Raise Limit plus the deadband, the M-0329B will issue a Lower command, after the set Time Delay has expired.

Terminals: Barrier Strip with 8 to 32 screws

LED Indicators

The **BLOCK RAISE/LOWER** LED will light to indicate when the voltage is outside the band.

The **LOWER** LED will light when the voltage exceeds the Block Raise Limit and the Time Delay setting.

Output Contacts

Output Contacts: Contacts are rated at 2 A at 120 Vac.

Blocking Contacts: Contacts will operate within 0.2 seconds after a voltage excursion to prevent the transformer control from causing another tapchange.

Alarm Contacts: After a fixed 3 minute time delay, if the voltage excursion is still present, the alarm is activated to indicate control failure.

Environmental

Temperature Range: Operates within ±1% voltage accuracy as per the following:

IEC 68-2-1	-40° C	96 hour duration
IEC 68-2-2	+80° C	96 hour duration
IEC 68-2-3	+40° C	93%$_{RH}$ 96 hour duration

Fungus Resistance: A conformal printed circuit board coating inhibits fungus growth.

Transient Protection

Input and output circuits are protected against system transients. The M-0329B will pass all the requirements of ANSI/IEEE C37.90.1-1989, which defines oscillatory and fast transient surge withstand capability. All inputs and outputs will withstand 1500 Vac to chassis or instrument ground for one minute. Voltage inputs are electrically isolated from each other, from other circuits, and from ground.

All faces of the relay, with the chassis solidly grounded, have been exposed to Radio Frequency Immunity testing and have successfully passed with a field intensity of 20 V per meter at typical utility frequencies of 144 MHz, 438 MHz, and at 450 MHz.

Physical

Size: 5–3/4" high x 8–3/4" wide x 3–1/2" deep (14.6 cm x 22.2 cm x 8.9 cm)

Approximate Weight: 3 lbs (1.4 kg)

Approximate Shipping Weight: 5 lbs (2.3 kg)

Patent & Warranty

The M-0329B LTC Backup Control is covered by a five year warranty from date of shipment.

Installation

The mounting and outline dimensions are shown in Figure 2, and the external connections in Figure 3.

The M-0329B can be connected as a two-terminal device, by paralleling the Power Input (TB1-1 to TB1-2) and the Voltage (Sensing) Input (TB1-3 to TB1-4). With this connection, the **BANDCENTER** and the **BANDWIDTH** controls can be set so that an upper voltage and a lower voltage limit are established at the desired levels.

On controls where compensated voltage from the line drop compensator is available, the M-0329B can be connected as a four-wire device. The Power Input should be connected to a 120 Vac source and the Voltage Input is then connected to the LDC compensated voltage.

Since sudden changes in the transformer primary voltage may move the secondary voltage outside the range of the LTC control and the M-0329B, a 3 minute timer is provided to allow a normal control to correct the voltage. After 3 minutes of abnormal voltage, the M-0329B **ALARM** contact will indicate an abnormal condition. The **BLOCK RAISE/LOWER** LED will be on, the **ALARM** relay contacts TB1-14 to TB1-15 will be closed and TB1-15 to TB1-16 will be open. The **ALARM** contacts will also indicate an alarm condition if the ac power to the M-0329B fails.

The **ALARM** contacts should be used to alert system operators that a problem has occurred and that the LTC transformer or regulator is not operating. It must be recognized that the **ALARM** contacts may operate under conditions of heavy load using the two-wire connections and the line drop compensator.

The output blocking contacts should be connected in series with the raise and lower contacts from the LTC control. In some control circuits, a timing relay is used. There, the blocking contacts should be in series with the timing relay contacts. The blocking relay contacts should not be connected to drop out the motor starter relay once it is sealed in for a tapchange, since most tapchangers should not be stopped until the tapchange is completed. An exception to this is a spring-driven tapchanger that may be stopped at any time. Figure 5 shows the connections for using the M-0329B with most of the Beckwith Tapchanger and Regulator Controls.

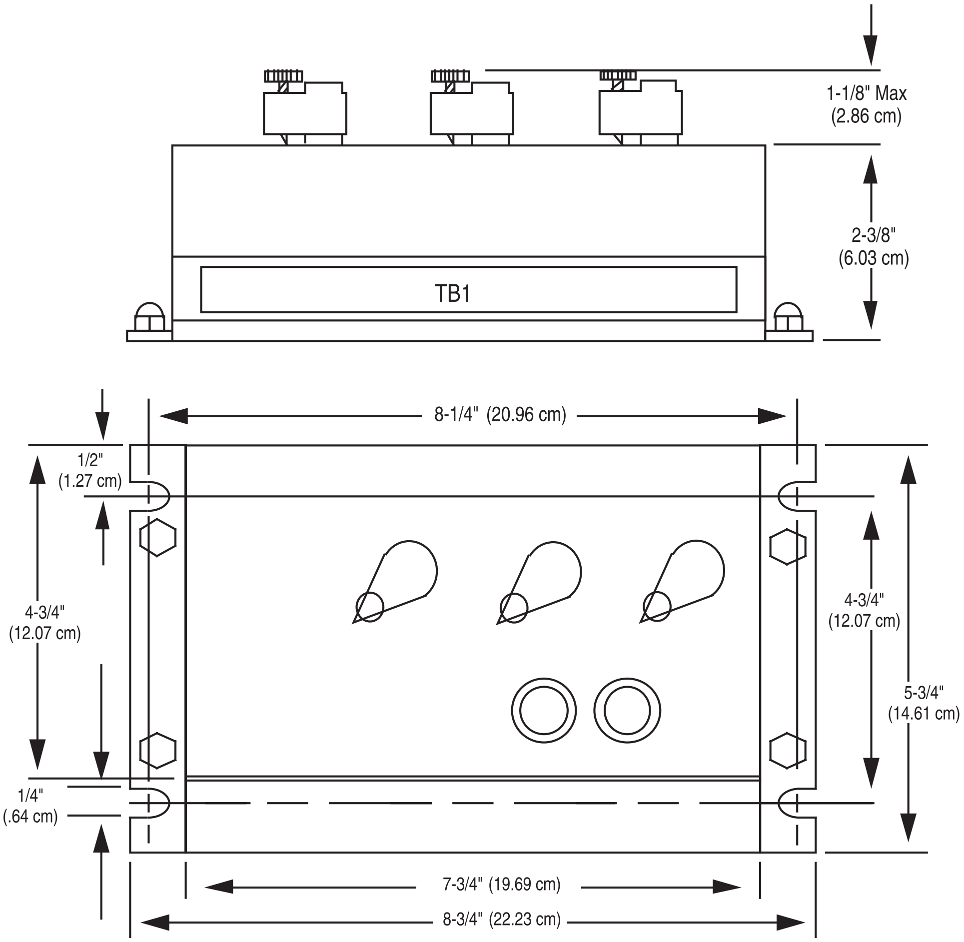

Figure 2 Mounting and Outline Dimensions

External Connections

The M-0329B LTC Backup Control is listed to UL Standards for Safety by Underwriters Laboratories Inc. (UL). To fulfill the UL requirements, terminal block connections must be made with No. 16 AWG wire inserted in an AMP #51864-1 (or equivalent) connector.

Torque Requirements

Both screws must be tightened to 16 inch-pounds torque.

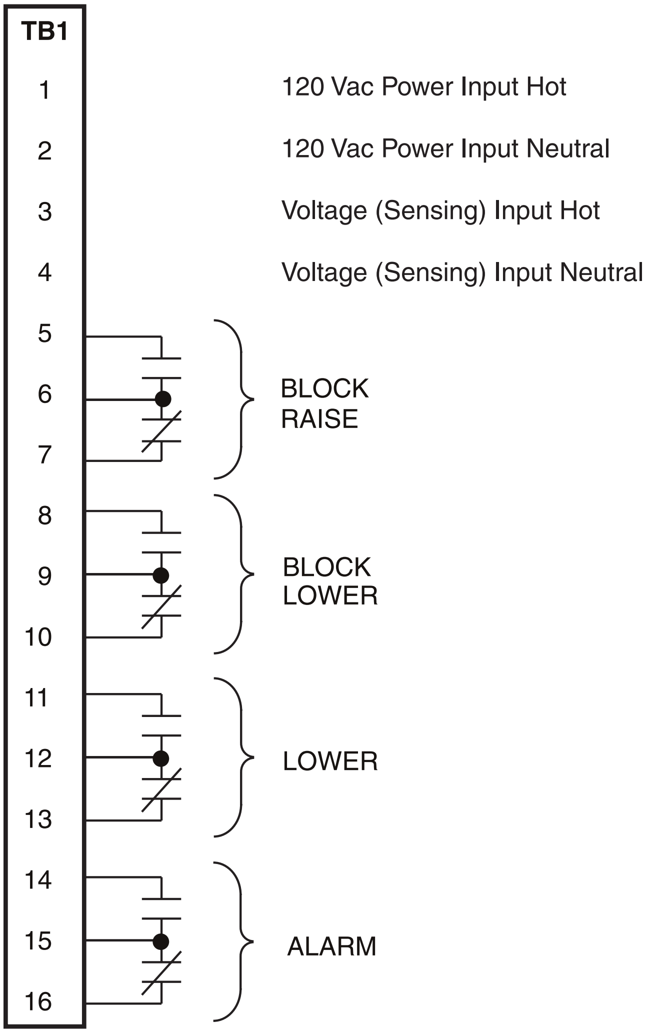

■ **NOTE:** All contacts are shown in the inactive (normal) condition, i.e. the output contact between TB1-14 and TB1-15 is open for the No Alarm condition and will close to indicate an Alarm Condition.

Figure 3 External Connections

Application

The M-0329B can be used in many applications not related to LTC backup for a very accurate overvoltage and/or undervoltage relay. The Block Raise (BLK R) and the Block Lower (BLK L) outputs can be used as overvoltage and undervoltage outputs, respectively.

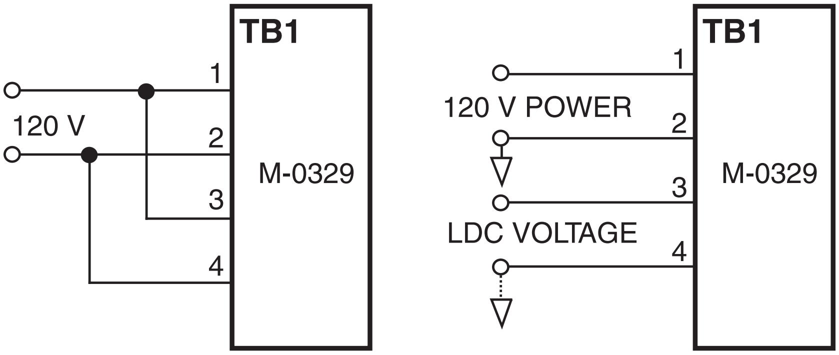

Figure 4 M-0329B Power and Voltage Input Connections

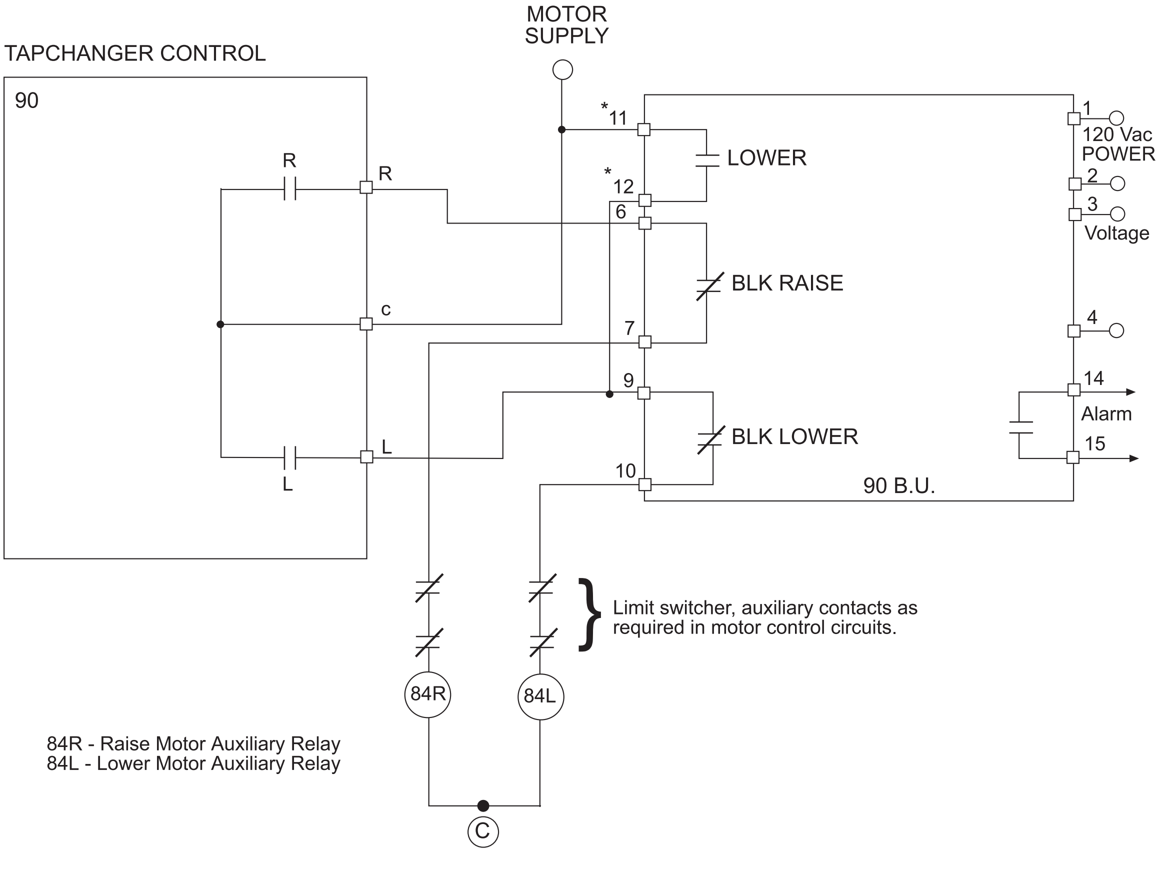

Figure 5 M-0329B Interconnections with Beckwith Tapchanger Control and Regulator

Adjustment

Accurately calibrated dials, labeled **BANDCENTER** and **BANDWIDTH**, set the Block Raise and Block Lower voltage levels. The dials on the M-0329B cover are calibrated in volts for use with 120 Vac nominal voltage.

The following equations will assist the user in choosing the correct setpoints for the M-0329B:

V_{BR} = the Upper Voltage Limit (Block Raise) desired

V_{BL} = the Lower Voltage Limit (Block Lower) desired

The Base Voltage is 120 Vac

The Bandcenter Voltage:

$$V_{BC} = \frac{V_{BR} + V_{BL}}{2}$$

The Bandwidth:

$$V_{BW} = V_{BR} - V_{BL}$$

Selectable Deadband

The deadband is selected on dipswitch S1. There is an opening on the side of the unit providing access to S1. The default position is 1 V, as shown in Figure 6.

When position 1 is up and positions 2, 3, and 4 are down, the deadband selection is 1 V. When position 2 is up and positions 1, 3, and 4 are down, the deadband selection is 2 V. See Table 1.

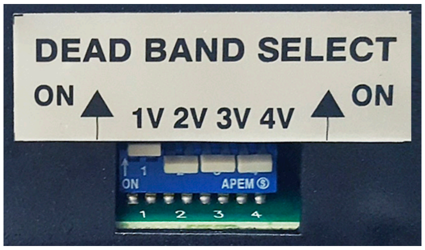

■ **NOTE:** Switch S1 shown in default position 1V. If more than one switch is in the "up" position, the control's operation and deadband setting will be unpredictable.

Figure 6 Switch S1 Selectable Deadband

	Switch S1 Position			
Deadband Setting	S1-1V	S1-2V	S1-3V	S1-4V
1V	UP	Down	Down	Down
2V	Down	UP	Down	Down
3V	Down	Down	UP	Down
4V	Down	Down	Down	UP

Table 1 Switch S1 Position Settings

Test Procedure

Test Setup

Make the electrical connections as required in Figure 7. The functional indicator lamps are suggested to facilitate testing and can be eliminated if other methods are used.

Equipment Required

1. A stable 60 Hz source with fixed 120 V rms and proper load regulation so that the amplitude does not change more than 0.05 V rms when the relays are energized or the functional indicator lamps are on.
2. A variac, 0 to 140 V adjustable transformer.
3. A high impedance true rms digital multimeter with an ac accuracy of at least ±0.02% of reading, Fluke 45 or equivalent.
4. Solder sucking syringe or solder wick.
5. Soldering iron - Weller Controlled Output Soldering Station Model MTCPL, 60 W, 120 V, 50/60 Hz or equivalent with grounded tip.
6. An accurate stopwatch.

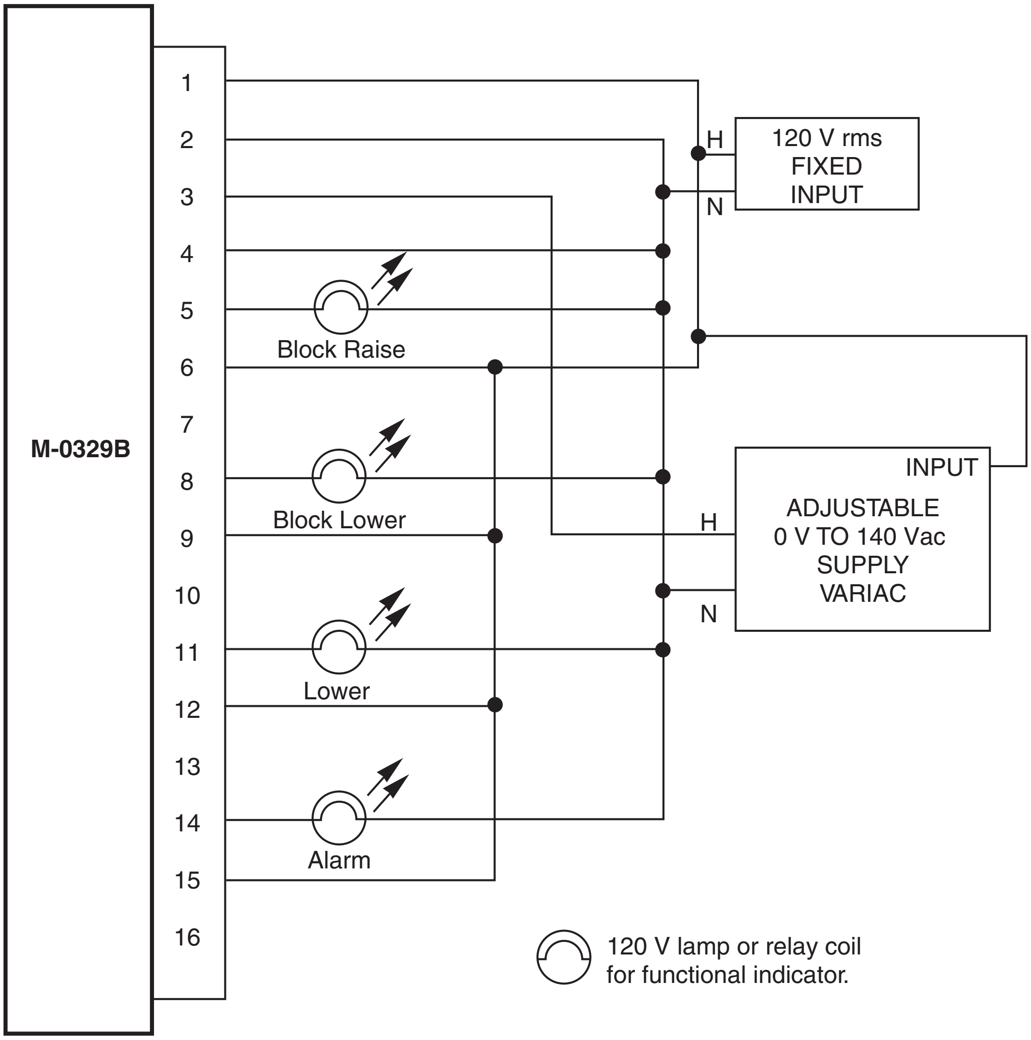

Figure 7 Test Setup Diagram

Procedure for Determining Voltage Bandcenter

When checking the voltage **BANDCENTER** settings, the exact voltage where the **BLOCK RAISE/LOWER** and **LOWER** LEDs light should be recorded. The voltage level Bandcenter is calculated as the average of these voltages:

$$Bandcenter\ Voltage = \frac{V_{Block\ Lower} + V_{Block\ Raise}}{2}$$

The voltage at which the **BLOCK RAISE/LOWER** and **LOWER** LEDs, and the functional indicators shown in Figure 7 turn on should be recorded in all cases. The band-edge hysteresis causes the LEDs to turn on and off at slightly different voltages.

Test Procedure

Refer to Figure 1 for a diagram depicting Bandcenter, Bandwidth and Fixed Deadband voltage levels.

Bandcenter Test

7. Set the **BANDWIDTH** dial at 6 V.
8. Set the **BANDCENTER** dial at 120 V and check the actual Bandcenter by varying the Voltage Input at TB1-3 to TB1-4. Be sure to position the **BANDCENTER** dial pointer exactly in the center of the line on the dial grid.
9. Repeat Step 2 at 108 V rms and 132 V rms.
10. The calculated values should be within ±1 V rms of the dial setting.

Bandwidth Test

11. The **BANDWIDTH** dial was previously set at 6 V Bandwidth. Check the actual Bandwidth by calculating the difference between $V_{Block\ Lower}$ and $V_{Block\ Raise}$.
12. Repeat Step 1 at 12 V Bandwidth, 18 V Bandwidth, and 24 V Bandwidth.
13. The Bandwidth should be within ±10% of setting.

Deadband (Block Raise to Lower) Test

14. Return the **BANDWIDTH** dial to 6 V.
15. Check the actual Bandwidth between the $V_{Block\ Raise}$ and V_{Lower} by recording the voltage at which the **LOWER** LED turns off.
16. Reduce the input voltage until the Block Raise functional indicator turns on.
17. Calculate the Deadband = $V_{Lower} - V_{Block\ Raise}$. The setting is selectable by the customer.
18. The calculated Deadband should be within ±3% of the setting.

Lower Timer Delay Test

19. Set the **TIME DELAY** potentiometer to 1 second (minimum).
20. Increase the input voltage until the **LOWER** LED lights. Using a stopwatch, measure the time required for the **LOWER** relay to pick up.
21. Adjust the **TIME DELAY** potentiometer to 30 seconds (maximum) and repeat Step 2.
22. The measured times should be within ±15% of setting.

Fixed Alarm Time Delay Test

23. Set the **BANDCENTER** control to 120 V rms.
24. Set the **BANDWIDTH** control to 6 V.
25. Decrease the input voltage until the **BLOCK RAISE/LOWER** LED lights. Using a stopwatch, measure the time required for the **ALARM** relay to de-energize.
26. The measured time should be 180 seconds ±20%.
27. Return the input voltage to 120 V rms or until the **BLOCK RAISE/LOWER** LED turns off.
28. Increase the voltage potential until the **BLOCK RAISE/LOWER** LED lights. Measure the time required for the **ALARM** relay to de-energize.
29. Remove the 120 Vac power source from the M-0329B. The **ALARM** relay should de-energize without a time delay.

Replaceable Fuses

There are two replaceable fuses: Fuse F1 (1A) BECO Part Number 420-00719, and Fuse F2 (1/2A) BECO Part Number 420-00725. See Figure 8 for Fuse location.

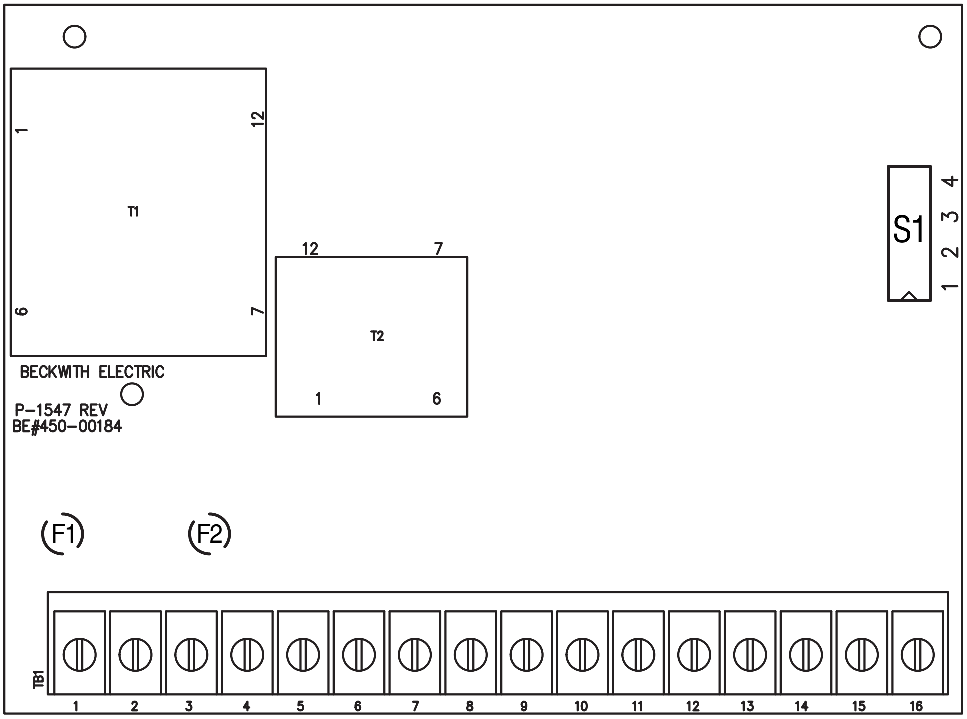

Figure 8 Simplified Component Location (Switch S1, Fuses F1 and F2)

Disposal and Recycling

Disposal of E-Waste for Beckwith Electric Products

The customer shall be responsible for and bear the cost of ensuring all governmental regulations within their jurisdiction are followed when disposing or recycling electronic equipment removed from a fixed installation.

Equipment may also be shipped back to Beckwith Electric for recycling or disposal. The customer is responsible for the shipping cost, and Beckwith Electric shall cover the recycling cost. Contact Beckwith Electric for an RMA # to return equipment for recycling.

TRADEMARKS

All brand or product names referenced in this document may be trademarks or registered trademarks of their respective holders.

Specification subject to change without notice. Beckwith Electric has approved only the English version of this document.

BECKWITH ELECTRIC

6190 118th Avenue North • Largo, Florida 33773-3724 U.S.A.
PHONE (727) 544-2326
beckwithelectricsupport@hubbell.com
www.beckwithelectric.com
ISO 9001:2015

A proud member of the Hubbell family.

© 1998 Beckwith Electric. All Rights Reserved.

M-0329B-SP-05 03/23

BECKWITH ELECTRIC®

CONTROLS

AC/DC to DC Backup Power Supply
M-2026

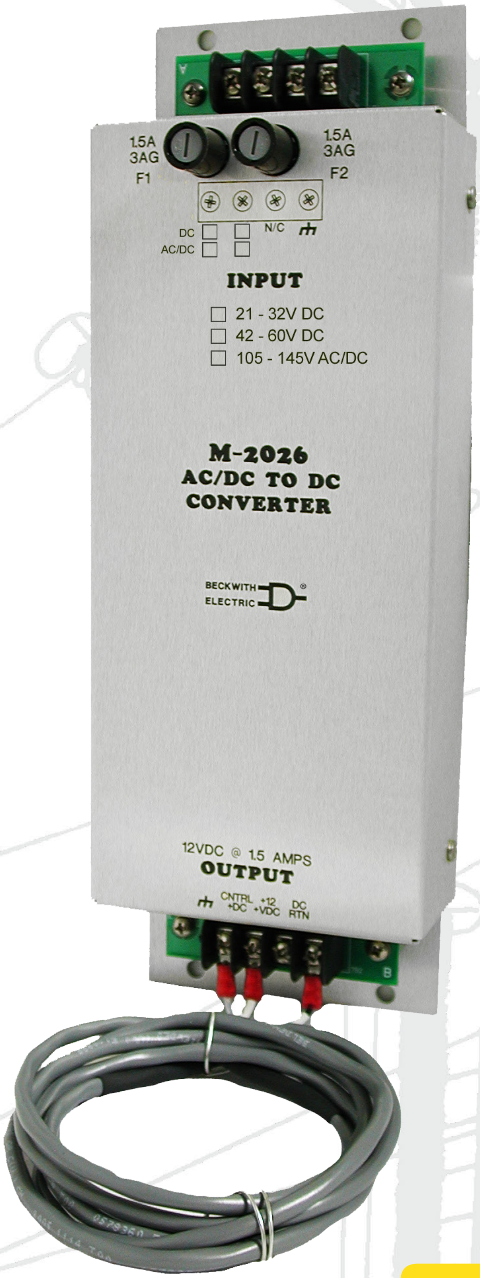

- **Maintains the M-2001C/D or M-6200 energized during power outages to maintain the continuity of the communications loop**
- **Accepts AC and/or DC power input (50 or 60 Hz) from station auxiliary supply over the following ranges:**
  21 to 32V DC
  42 to 60V DC
  105 to 145V AC/DC
- **Fuse protected and transient suppressed, input and output**
- **Substation hardened**
  -40° C to +85° C
- **Conformal coated**
- **Includes 6 foot output cable and adapters for M-2001C/D and M-6200 controls**

HUBBELL®

Inputs (AC and/or DC)

21 to 32 Vdc
42 to 60 Vdc
105 to 145 V AC/DC

Burden of less than 8 VA
Bipolar Fuse protection (1.5 A)
Reverse polarity protection for a dc input
Transient protected

Output

+12 Vdc regulated (±.5 V) @ 1.5 amp
Transient protected

Transient Protection

Surge Withstand Capability:
IEEE C37.90.0-2002: 2500 V pk-pk oscillatory, 4000 V pk fast transient burst
IEEE C37.90.0-2002: 2500 V pk-pk oscillatory, 5000 V pk fast transient burst

High Voltage: All M-2026 input terminals will withstand 1500 Vac RMS to chassis or instrument ground for one minute with a leakage current not to exceed 25 mA, for all terminals to ground. The M-2026 output terminals will withstand 500 Vac RMS to chassis or instrument ground for one minute with a leakage current not to exceed 25 mA, for terminals to ground. Input and output circuits are electrically isolated from each other, from other circuits and from ground.

Radiated Electromagnetic Withstand Capability: All units are protected against electromagnetic radiated interference from portable communications transceivers.

Environmental

Temperature range: -40° C to +85° C

Humidity: Operational to a maximum of 95% relative humidity.

Fungus Resistance: A conformal printed circuit board coating inhibits fungus growth.

Physical

Size: 12.0" long x 4.10" wide x 2.38" high (30.5 cm x 10.2 cm x 6.1 cm)

Approximate Weight: 3.0 lbs (1.36 kg)

Warranty

The M-2026 is covered by a five year warranty from date of shipment.

TRADEMARKS

All brand or product names referenced in this document may be trademarks or registered trademarks of their respective holders.

Specification subject to change without notice. Beckwith Electric has approved only the English version of this document.

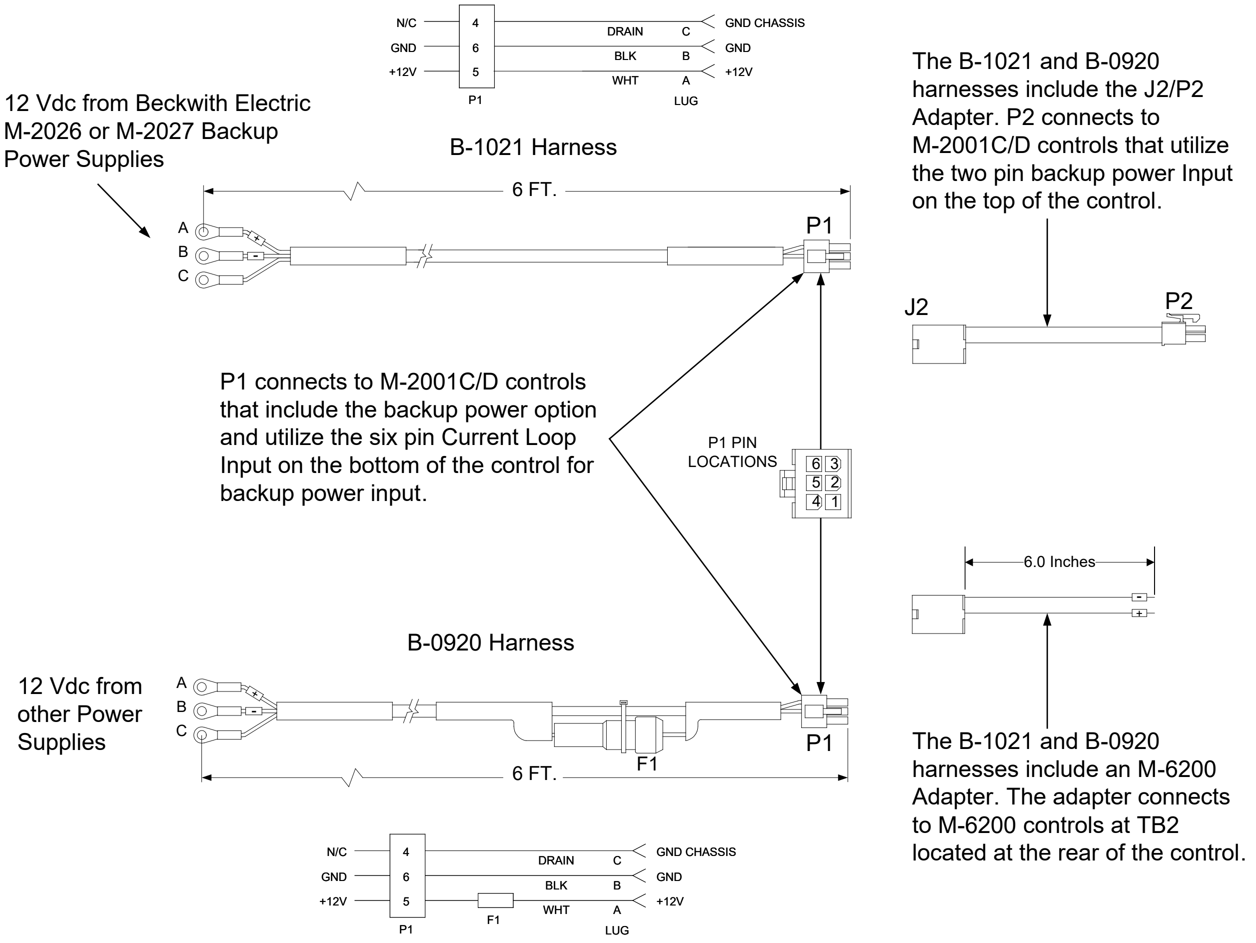

12 Vdc from Beckwith Electric M-2026 or M-2027 Backup Power Supplies

The B-1021 and B-0920 harnesses include the J2/P2 Adapter. P2 connects to M-2001C/D controls that utilize the two pin backup power Input on the top of the control.

P1 connects to M-2001C/D controls that include the backup power option and utilize the six pin Current Loop Input on the bottom of the control for backup power input.

12 Vdc from other Power Supplies

The B-1021 and B-0920 harnesses include an M-6200 Adapter. The adapter connects to M-6200 controls at TB2 located at the rear of the control.

Figure 1 Output Cable and Adapters

BECKWITH ELECTRIC
6190 118th Avenue North • Largo, Florida 33773-3724 U.S.A.
PHONE (727) 544-2326
beckwithelectricsupport@hubbell.com
www.beckwithelectric.com
ISO 9001:2015

A proud member of the Hubbell family.

© 2005 Beckwith Electric. All Rights Reserved.

BECKWITH ELECTRIC

CONTROLS

AC to DC Backup Power Supply
M-2027

- **Maintains the M-2001C/D or M-6200 energized during power outages to maintain the continuity of the communications loop**
- **Accepts power input from station auxiliary supply over a range of 105 Vac to 140 Vac (50 or 60 Hz)**
- **Fuse protected and transient suppressed, input and output**
- **Substation hardened -40° C to +85° C**
- **Conformal coated**
- **Includes 6 foot output cable and adapters for M-2001C/D and M-6200 controls**

HUBBELL

Input

105 Vac to 140 Vac at 50Hz/60Hz
Burden of less than 2 VA
Fuse protected (1.5 A)
Transient protected

Output

+12 Vdc nominal @ 1 amp
Fuse protected (1.5 A)
Transient protected

Transient Protection

Surge Withstand Capability:
IEEE C37.90.0-2002: 2500 V pk-pk oscillatory, 4000 V pk fast transient burst
IEEE C37.90.0-2002: 2500 V pk-pk oscillatory, 5000 V pk fast transient burst

High Voltage: All M-2027 input and output terminals will withstand 1500 Vac RMS to chassis or instrument ground for one minute with a leakage current not to exceed 25 mA, for all terminals to ground. Input and output circuits are electrically isolated from each other, from other circuits and from grounds.

Radiated Electromagnetic Withstand Capability: All units are protected against electromagnetic radiated interference from portable communications transceivers.

Environmental

Temperature range: -40° C to +85° C

Humidity: Operational to a maximum of 95% relative humidity.

Fungus resistance: A conformal coating is used on the printed circuit board coating inhibit fungus growth.

Physical

Size: 7.32" long x 4.10" wide x 2.40" high (18.6 cm x 10.2 cm x 6.1 cm)

Approximate Weight: 2.0 lbs (.91kg)

Warranty

The M-2027 is covered by a five year warranty from date of shipment.

TRADEMARKS

All brand or product names referenced in this document may be trademarks or registered trademarks of their respective holders.

Specification subject to change without notice. Beckwith Electric has approved only the English version of this document.

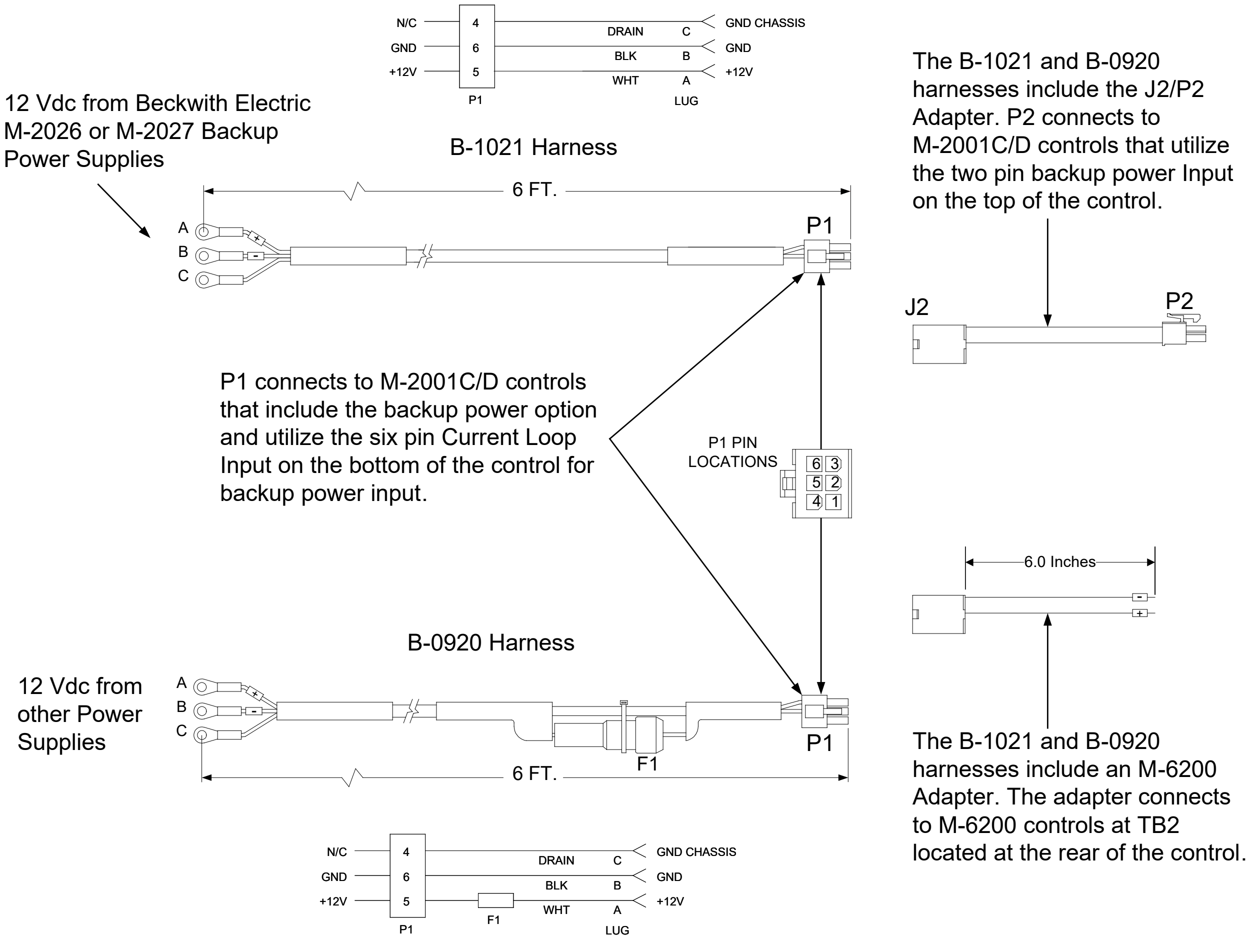

12 Vdc from Beckwith Electric M-2026 or M-2027 Backup Power Supplies

The B-1021 and B-0920 harnesses include the J2/P2 Adapter. P2 connects to M-2001C/D controls that utilize the two pin backup power Input on the top of the control.

P1 connects to M-2001C/D controls that include the backup power option and utilize the six pin Current Loop Input on the bottom of the control for backup power input.

12 Vdc from other Power Supplies

The B-1021 and B-0920 harnesses include an M-6200 Adapter. The adapter connects to M-6200 controls at TB2 located at the rear of the control.

Figure 1 Output Cable and Adapters

BECKWITH ELECTRIC
6190 118th Avenue North • Largo, Florida 33773-3724 U.S.A.
PHONE (727) 544-2326
beckwithelectricsupport@hubbell.com
www.beckwithelectric.com
ISO 9001:2015

A proud member of the Hubbell family.

© 2005 Beckwith Electric. All Rights Reserved.

M-2027-SP-03 03/23

BECKWITH ELECTRIC®

CONTROLS

Parallel Balancing Module
M-0115A

Provides all components that are required for paralleling LTC Transformers using the Circulating Current Method

HUBBELL®

The M-0115A Parallel Balancing Module includes all the components that must be added to load tapchanging (LTC) transformers to permit them to operate in parallel, using the circulating current method. The transformer controls must have a 0.2 A input for load and circulating current. Through the use of a circulating current sensitivity adjustment, the M-0115A avoids the problems of hunting (caused by too much sensitivity), or permitting the transformers to be several steps apart (caused by too little sensitivity). The M-0115A conforms to the procedure described in ANSI C57.12.10-1988, paragraph 10.2.

Current Inputs

Rated at 0.2 A, 12 VA, 50/60 Hz.

Current Ratings

Either winding K1, K2 or ACT from terminal TB1-1 to TB1-5 is rated for 0.2 A continuous.

All windings will withstand the following: 0.4 A continuous, 2.9 A for 5 sec; 3.3 A for 4 sec; 4.0 A for 3 sec; 5.0 A for 2 sec.

Cores are unsaturated at 12 VA burden.

Sensitivity Control

Sensitivity adjustment prevents LTC transformers from hunting or being several steps apart.

Sensitivity is adjustable from two times normal to 0.5 times normal in nine steps.

Parallel/Independent Switch

Mode of LTC control is switch selectable.

Transient Protection

Input and output circuits are protected against system transients. The M-0115A will exhibit no component failure or false commands when subjected to the requirements of ANSI/IEEE C37.90.1-1989, which defines oscillatory and fast transient surge withstand capability. All inputs and outputs will withstand 1500 Vac to chassis or instrument ground for one minute. Voltage inputs are electrically isolated from each other, from other circuits, and from ground.

Mounting

Panel mounted using 8-1/2" x 6-1/8" cutout (21.59 cm x 15.56 cm). May be surface mounted using the M-0124 Surface Mounting Adapter.

Environmental

Temperature Range: Stated accuracies are maintained from -40° to +80° C.

Humidity: Stated accuracies are maintained at up to 95% relative humidity (non-condensing).

Fungus Resistance: A conformal printed circuit board coating inhibits fungus growth.

Terminal Block Connections/Torque Requirements

The M-0115A Parallel Balancing Module is listed to UL Standards for Safety by Underwriters Laboratories Inc. (UL). The wire should be No. 22–16 AWG inserted in an AMP #36157 (or equivalent) connector, and the screws tightened to 4.8 inch-pounds torque.

Physical

Size: 10" high x 6 3/8" wide x 4 15/32" deep (25.40 cm x 16.19 cm x 11.35 cm). When using the M-0124 Surface Mounting Adapter, maximum depth is 4 9/16" (11.59 cm).

Approximate Weight: 6 lb (2.7 kg).

Approximate Shipping Weight: 7 1/2 lb (3.4 kg).

Warranty

The M-0115A unit is covered by a five year warranty from time of purchase.

Application

The Beckwith Electric **Comprehensive System Manual** *"LTC Transformer Control System including Paralleling and Backup Control"*, is available on www.BeckwithElectric.com, or by request. This manual includes an overview of typical system setup and connections, necessary components, and the information necessary to implement a paralleling scheme using the M-0115A in the Circulating Current paralleling method.

Using the M-0115A with Existing Equipment

The M-0115A Parallel Balancing Module can be ordered with new equipment from most transformer manufacturers or added to existing transformers. If the Module is added to existing equipment, the following factors should be considered:

- If the old control uses a 5A input for the line drop compensator, a new control must be installed to provide the required 0.2A load and circulating current inputs. A Beckwith Electric M-2001C/D Tapchanger Control is recommended for this application.
- The M-0115A is designed for use with 200 mA = 1 P.U. system currents. If only 5 A currents are available, then a suitable 5 A:0.2 A Auxiliary Current Transformer, such as the Beckwith Electric M-0169A, is recommended.
- If phase-to-phase voltage is used, two current transformers are used to derive a current in phase with the voltage. Connection must be made to Terminal 5 of the M-0169A instead of Terminal 1. Only required with M-0067E, M-2001C/D have a Phase Angle Correction Setting for this condition.
- Refer to the paralleling diagrams in the **LTC Comprehensive System Manual** for the following conditions:
  - – If circuit breakers such as the "52 Line Breaker(s)" and the "24 Tie Breaker(s)" as shown in the paralleling diagrams are present, then their auxiliary contact connections should be included as shown to ensure proper automatic transfer from parallel to independent operations. Please note that auxiliary breaker contacts are shown in the parallel mode with all breakers closed.
  - – If these breakers do not exist, and for example, only one common load breaker is used, the circuit should be wired to make a circuit where the normally closed contacts are shown. No circuit should be made where the normally open contacts are shown.

- If paralleling and hand-operated load switches are used:
  a. **AUTO/MANUAL** switches on the M-2270, M-2278, M-2280, and other Beckwith Electric adapter panels should be placed in the **MANUAL** position.
  b. Other controls should be placed in the **MANUAL** position.
  c. The M-0115A **PARALLEL/ INDEPENDENT** switch should be placed in the **INDEPENDENT** position before the load switches are operated (see **CAUTION**).

▲**CAUTION:** Do not place the **PARALLEL/ INDEPENDENT** switch on the front panel of the M-0115A in **INDEPENDENT** mode when the transformers are in parallel and under automatic control, as this will disable the controls' ability to monitor, track, and control the paralleling biasing functions of Circulating Current paralleling.

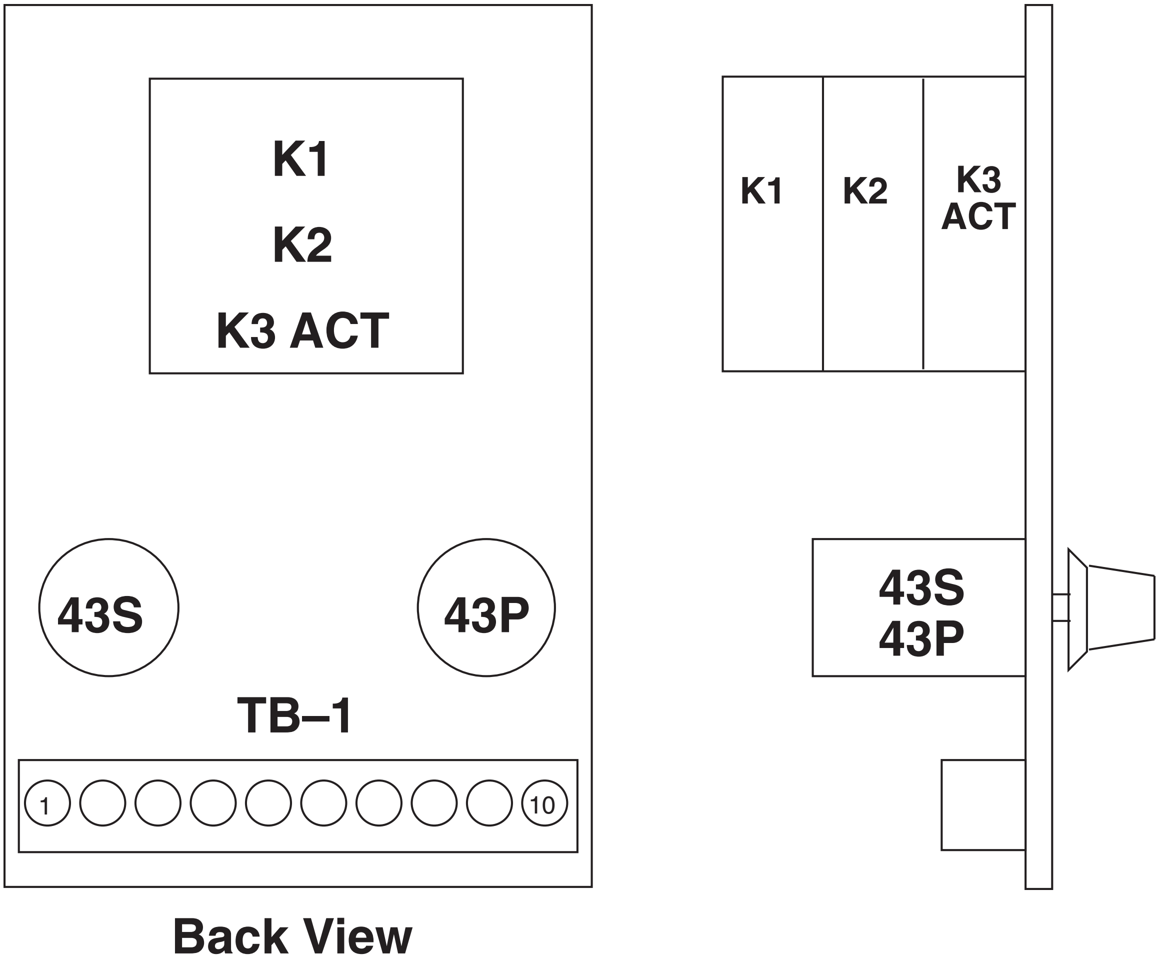

Figure 1 M-0115A Component Location

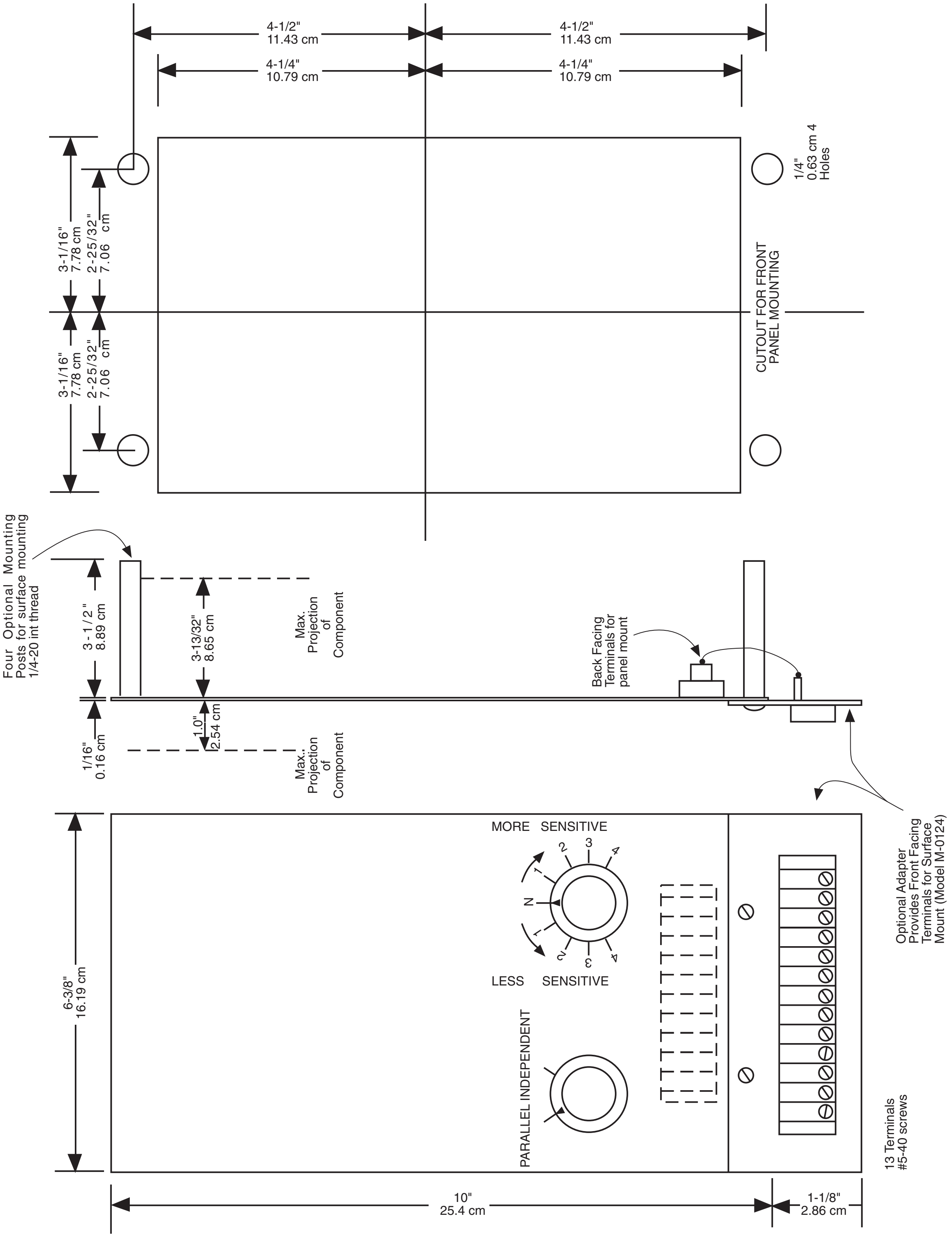

Figure 2 M-0115A Outline and Mounting Dimensions

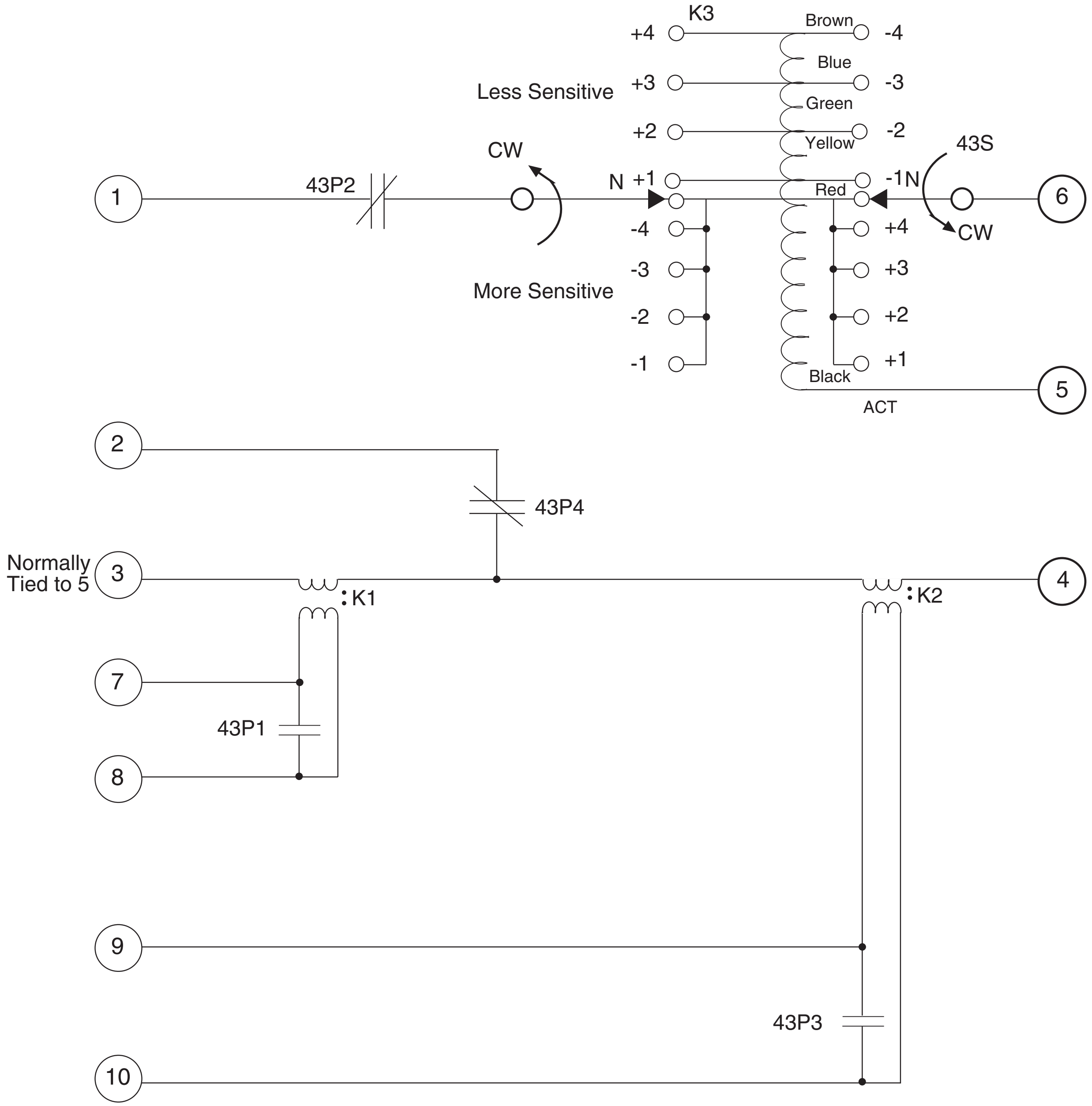

43P Parallel - Independent switch shown in “P” position.

43S Sensitivity Switch

Figure 3 M-0115A Schematic

Trademarks

All brand or product names referenced in this document may be trademarks or registered trademarks of their respective holders.

Specification subject to change without notice. Beckwith Electric has approved only the English version of this document.

BECKWITH ELECTRIC
6190 118th Avenue North • Largo, Florida 33773-3724 U.S.A.
PHONE (727) 544-2326
beckwithelectricsupport@hubbell.com
www.beckwithelectric.com
ISO 9001:2015

A proud member of the Hubbell family.

© Beckwith Electric. All Rights Reserved.

BECKWITH ELECTRIC®

AC Current Relay M-0127A/M-0170A

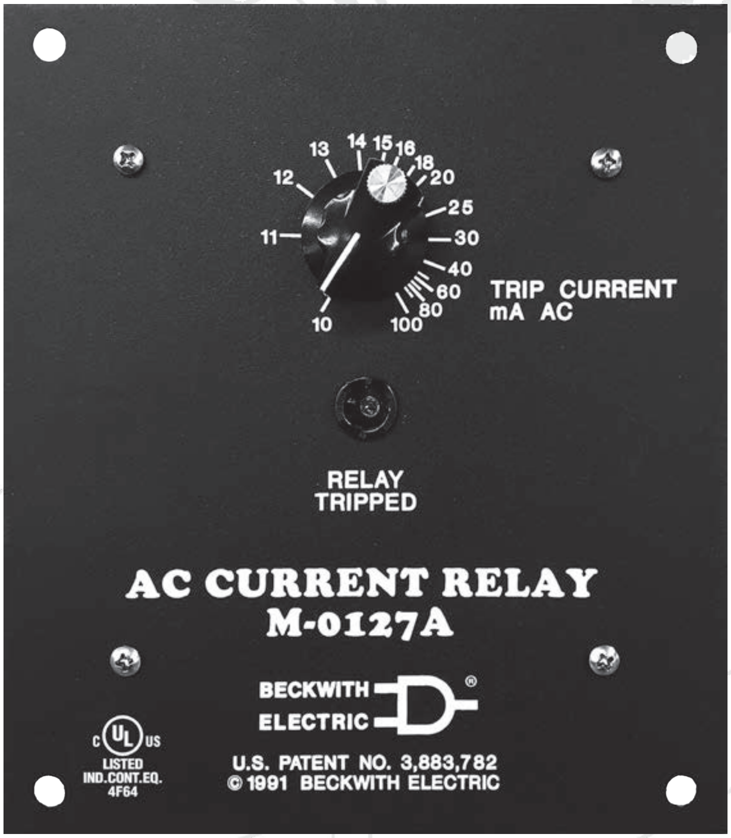

- **M-0127A:**
  0.01 to 0.1 Amps
- **M-0170A:**
  0.2 to 0.4 Amps

- **M-0127A intended for use in 0.2 A circulating current circuit of paralleled LTC transformers to guard against damaging excessive circulating current**
- **M-0170A prevents damage to LTC transformer's switching mechanism under excessive loads**

HUBBELL®

M-0127A Application

The M-0127A AC Current Relay is primarily designed as a recommended addition to the Circulating Current or Delta VAr1 Paralleling configurations used with LTC Transformers. Its purpose is to monitor the current in the circulating loop between transformers, and interrupt Motor Power to its monitored transformer, should the circulating current exceed a predetermined value. The M-0127A range permits the maximum circulating current to be set from 5% to 50% of the rated full load current.

Other relays used for this purpose have an impedance exceeding 5,000 Ω which may cause the main CT to saturate, making the entire circulating current scheme operate poorly. The low impedance of the M-0127A relay avoids this problem.

The output should be connected in series with the common lead of the automatic control circuit of the motor starter relay. When used with the Beckwith Electric M-0067E control, the M-0127A output contacts will be in series with the lead that would otherwise have gone directly to terminal TB1-8 of the M-0067E. Polarity of the M-0127A input and output can be ignored.

M-0170A Application

The M-0170A AC Current Relay is intended to be used in the load current circuit to prevent the tapchanger from changing taps on excessive load current. Its range permits the current setting from 100% to 200% of the rated full load current. The relay is connected in the same manner as the M-0127A.

Additional Applications

The M-0127A and M-0170A can be used wherever an adjustable, low burden AC relay is required. They have virtually no time delay, a very small hysteresis and a normally closed output for use on AC only. The relay output draws approximately 6 mA of in-phase current through a 120 Vac load when open. These factors must be considered for the user’s specific application.

By adding external series resistors, the relays may be used for voltage sensing. For example, with a 10 K series resistor, the M-0127A is adjustable from 100 to 140 Vac, using 10 to 14 mA current setting range. Use of a 10 K, 10 W wire-wound resistor is suggested.

Output

▲**CAUTION:** A capacitor must not be tied across the output or across output load as this will damage the triac in spite of fuse F1. The output is capable of handling a NEMA size 1 or smaller reversing-type motor starter.

The output is normally closed (with input current below threshold). The current carrying capability is shown in Table 1.

The output will draw approximately 6 mA of in-phase current through a 120 Vac load when the current exceeds the threshold. This will not be sufficient to hold in a NEMA-type starter. When used with old motor starters, a test should be made to make certain this small amount of current will not hold the relay closed. If it does, the air gap on the relay should be increased or other adjustments made so it will properly drop out.

■**NOTE:** This current can be exceeded in controllers where the triacs do not conduct continuously, as long as the product of current times the duty cycle does not exceed the values in Table 1.

Air Temperature Around Relay	Maximum Continuous AC Current
25° C	1.6 A
40° C	1.2 A
60° C	0.8 A
80° C	0.4 A

Table 1 Output Current Carrying Capability

For very short times, the surge current limit is shown in Table 2.

Time Duration: Cycles, 60 Hz	Non-Repetitive Surge: Amps
1	25
4	16
10	11
100	6

Table 2 Output Surge Current Limit

Inputs

- All solid–state design, transient protected.
- Two terminal input, transformer isolated from the output.
- Current setting adjusted with a calibrated dial.

M-0127A: 10 mA to 100 mA ac current range. 50/60 Hz, will withstand 2.5 A for one second.

M-0170A: 200 mA to 400 mA ac current range. Withstand 10 A for one second.

INPUT BURDEN:

M-0127A: 100 Ω to 500 Ω dependent upon setting.

M-0170A: 2 Ω.

Outputs

Two terminal ac switch (triac), normally conducting. Opens on input current above threshold setting. Rated 1 A at 120 Vac. Transient and overload protected. Load must not be highly capacitive. Auxiliary relay can provide parallel alarm function. Open circuit impedance: 20 K.

Alarm Relay

An alarm relay can be used in series with the output to obtain an alarm contact when the AC Current Relay has locked out the control. The following relay and socket are recommended:

- Relay: Potter & Brumfield KRP11AG: 120 Vac, DPDT contacts rated 10 A, 8-pin plug
- Socket: Potter & Brumfield 27E122: 8-pin industrial type with screw terminals for surface mounting

■ **NOTE:** Both are available from Beckwith Electric Company, Inc.

Temperature Range

Unit will operate properly from -40° C to +85° C.

Terminal Block Connections/Torque Requirements

The M-0127A and M-0170A AC Current Relays are listed to UL Standards for Safety by Underwriters Laboratories Inc. (UL). The wire should be No. 22–16 AWG inserted in an AMP #36157 (or equivalent) connector, and the screws tightened to 4.8 inch-pounds torque.

Physical

Size: 7-1/4" high x 6-6/16 wide x 4-3/8 deep (18.42 cm x 16.19 cm x 11.13 cm).

Approximate Weight: 1.4 lbs. (0.6 kg).

Approximate Shipping Weight: 3 lbs. (1.4 kg).

Patent & Warranty

The M-0127A/M-0170A is covered by U.S. Patent 3,883,782.

The M-0127A/M-0170A is covered by a five year warranty from date of shipment.

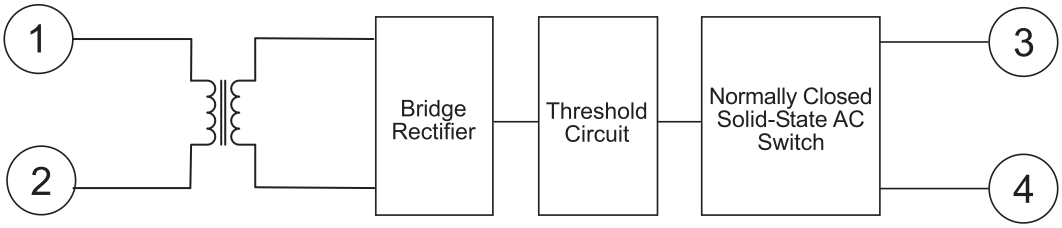

Figure 1 AC Current Relay Circuit

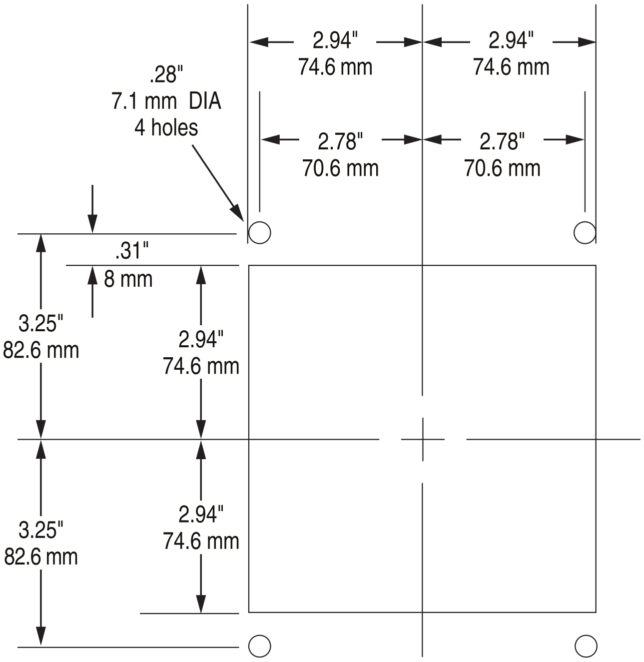

Figure 2 M-0127A & M-0170A Mounting Cutout Dimensions

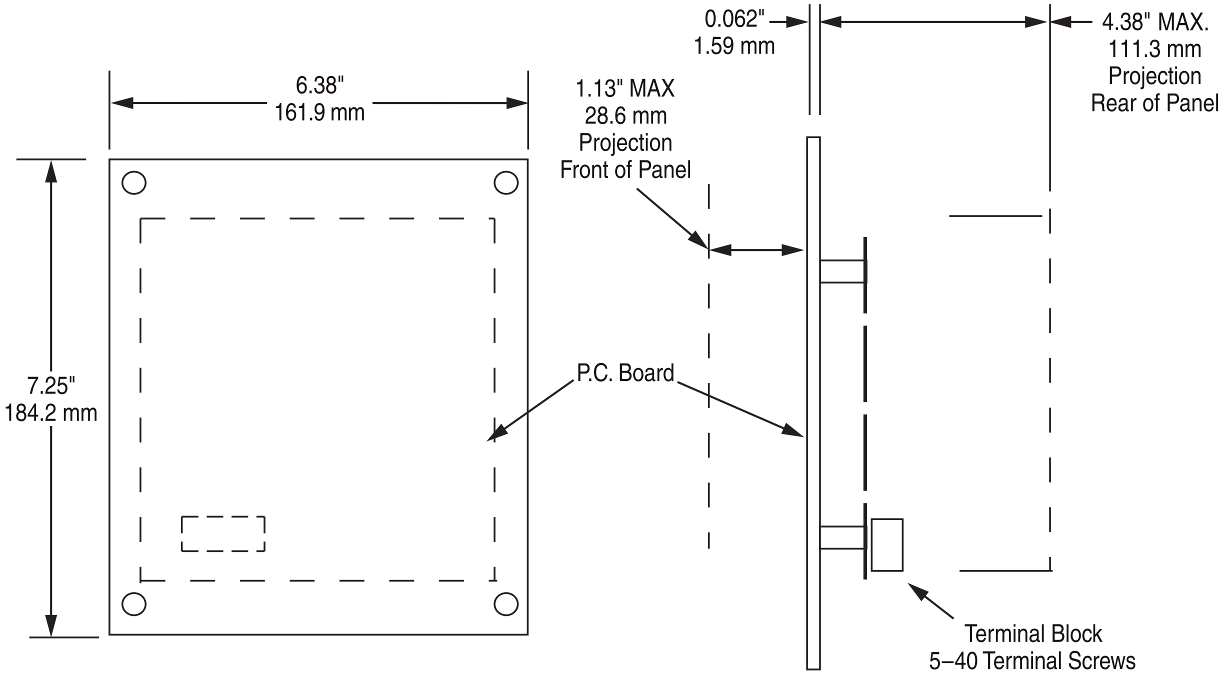

Figure 3 M-0127A & M-0170A Outline Dimensions

Test Procedure

Equipment Required

- AC current supply capable of supplying 500 mA.
- Digital voltmeter, Fluke model 8000A DMM or equivalent.
- Light bulb.
- 120 Vac source.
- AC milliammeter.

Test Setup

Make the connections to the AC Current Relay as shown in Figure 4.

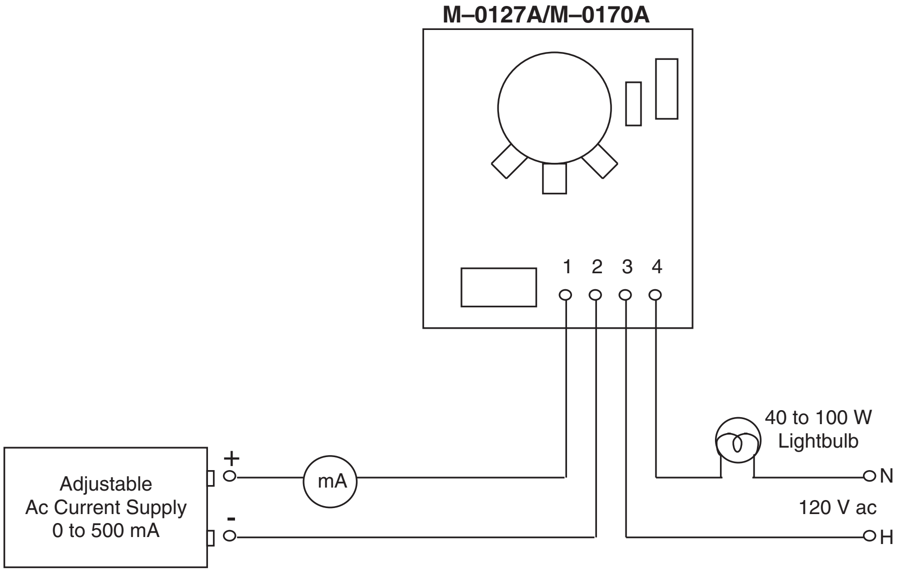

Figure 4 Test Setup

Test Procedure

First check the typical readings from Table 3 (M-0127A) or Table 4 (M-0170A). The readings were taken referenced to ground with the unit calibrated to 20% accuracy. If the readings do not match, calibrate the unit according to the procedures in the **CALIBRATION** section.

Typical Voltages

Use right (–) side of C2 for ground as shown in Figure 5, Component Location.

M-0127A Front Panel Setting	Input	V_{REC}	V_C	V_S	V_R	V_O	V_G	I_1
10	5	6.6	0.98	0.97	1.79	0.65	0.3	Off
10	15	9.82	3.89	3.85	2.62	5.88	0.67	On
20	15	7.66	1.85	1.83	2.13	0.67	0.3	Off
20	25	9.55	3.58	3.55	2.50	5.59	0.66	On
100	90	8.60	2.48	2.46	2.29	0.67	0.3	Off
100	110	9.23	2.07	2.04	2.48	5.53	0.66	On
in mA	in Volts dc 5%*							

Table 3 M-0127A Typical Voltages

M-0170A	Input	V_{REC}	V_C	V_S	V_R	V_O	V_G	I_1
200	100	7.9	1.8	1.8	2.11	.64	.3	Off
200	250	9.4	3.22	3.20	2.5	5.7	.7	On
300	250	8.3	2.2	2.19	2.3	.64	.3	Off
300	350	9.4	3.16	3.10	2.5	5.7	.7	On
400	350	8.5	2.26	2.23	2.3	.64	.3	Off
400	410	8.9	2.7	2.67	2.4	5.4	.7	On

Table 4 M-0170A Typical Voltages

Calibration

Refer to Figure 5 Simplified Component Location.

■**NOTE:** Always calibrate the unit at the point where the relay trips during an increasing current. When the relay trips, the RELAY TRIPPED lamp on the front panel will light.

1. Turn the front panel TRIP CURRENT control to maximum setting (fully clockwise).
2. Adjust R4 for relay trip equivalent to this setting.
3. Position the TRIP CURRENT control to the minimum setting (fully counterclockwise).
4. Adjust R3 for relay trip equivalent to this setting.
5. Repeat these procedures until both minimum and maximum settings are calibrated.

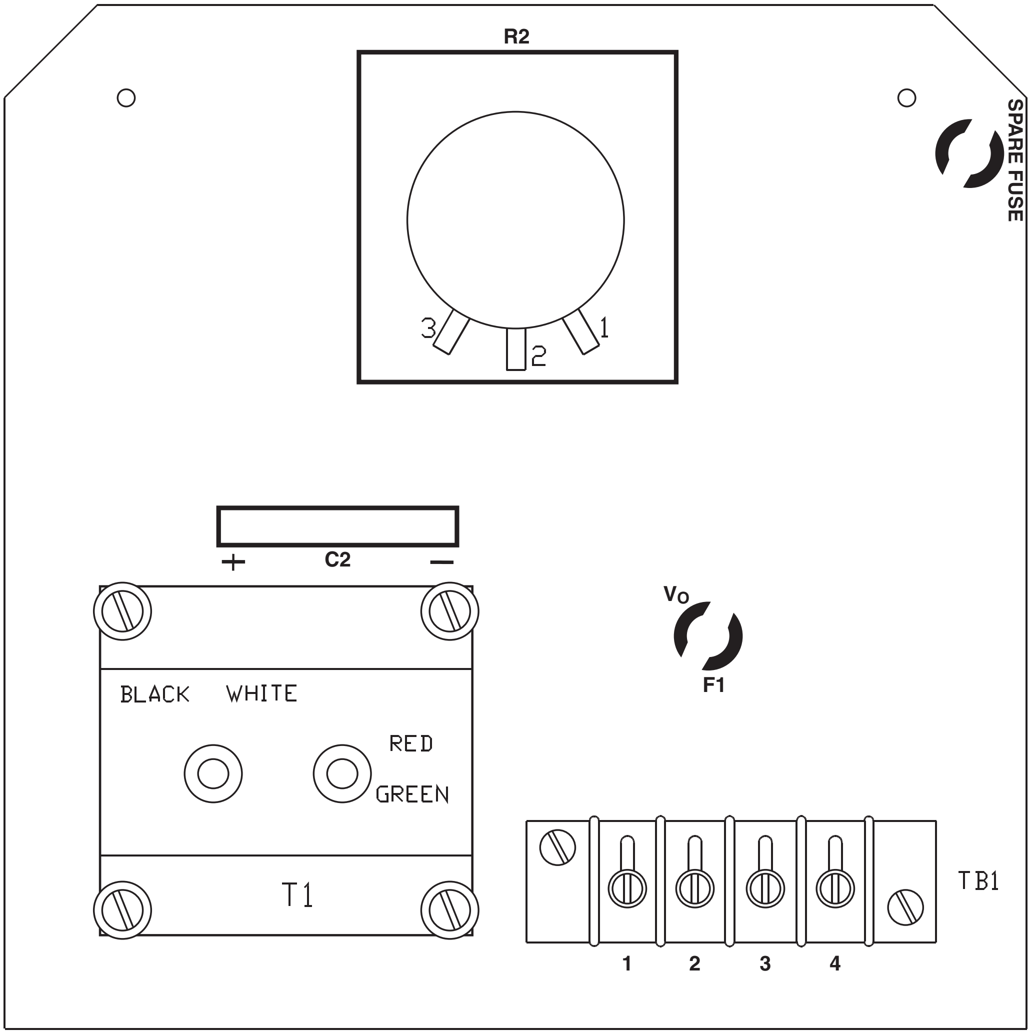

Figure 5 Simplified Component Location

TRADEMARKS

All brand or product names referenced in this document may be trademarks or registered trademarks of their respective holders.

Specification subject to change without notice. Beckwith Electric has approved only the English version of this document.

BECKWITH ELECTRIC
6190 118th Avenue North • Largo, Florida 33773-3724 U.S.A.
PHONE (727) 544-2326
beckwithelectricsupport@hubbell.com
www.beckwithelectric.com
ISO 9001:2015

A proud member of the Hubbell family.

© 1994 Beckwith Electric. All Rights Reserved.

C

Introduction to Circulating Current and Delta VAr1 Paralleling Methods

■ **NOTE:** REPLACES Beckwith Electric Application Note #11.

C.1 Overview

The circuits used for proper operation of two LTC transformers in parallel are not complex, but may be intimidating when only the complete circuit is shown, without adequate explanation of the principles involved and the purpose of each component. This Appendix builds the system starting from the basic requirements and illustrates how each component is an integral part of the whole.

This Appendix provides an introduction to the Circulating Current and Delta VAr1 methods of paralleling load tapchanging (LTC) transformers and step-voltage regulators. The application described, consists of two nearly identical LTC transformers that are to be operated in parallel. The system evaluated in this application consists of transformers of equivalent design, turns ratio and impedance. **Appendix D** examines applications with three or more transformers in parallel, and also applications where transformers are very different in their electrical characteristics.

■ **NOTE:** This method also applies to systems using fixed transformers in conjunction with step-voltage regulators.

The basic premise for LTC transformers operating in parallel is simple:

- The transformers must continue their basic function of controlling the load bus voltage as prescribed by the settings on the control.
- The transformers must act to minimize the current circulating between the transformers, as in the case of tapchangers operating on different tap positions.

With the circulating current paralleling method, the goal is that the transformers share the load equally, therefore, any *difference* of current in the paralleled transformers is to be minimized. Special circuits have been developed to "separate" the unbalanced current from the total transformer load current. This separated unbalanced current is then input to the control, so that the control will be biased in order to command the tapchanger to reduce the unbalanced component of the load current.

C.2 Application

DEFINING THE PROBLEM

A very common system example is illustrated in Figure C-1. There are two LTC transformers (12/16/20 MVA, 115 kV to 13.8 kV ±10% in 5/8% steps) which are to be operated in parallel with each other. Each transformer has an impedance of 9% and includes current transformers (CT) with ratios of 1000:5 A. The associated voltage transformers (VT) are rated for 120 V at the secondary, when the system voltage is exactly 13.8 kV.

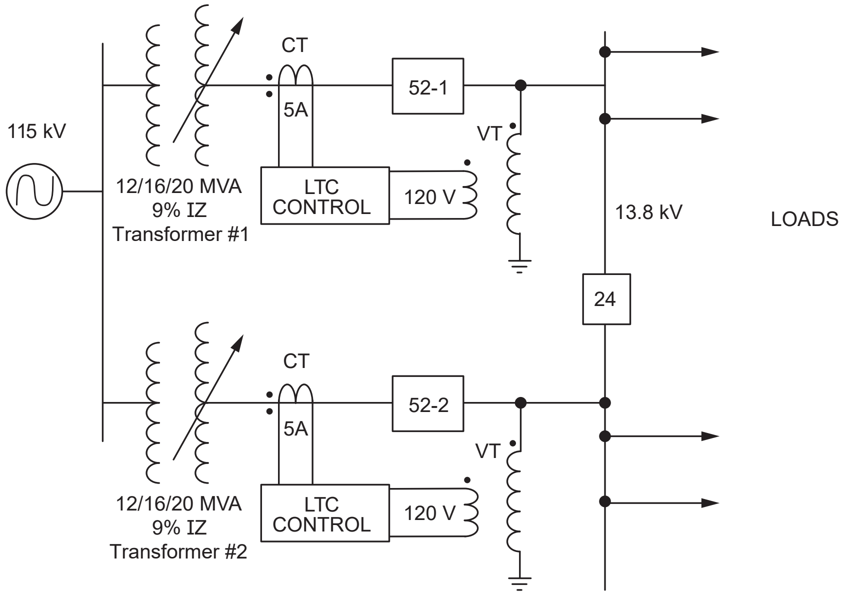

Figure C-1 System Example for Study of LTC Transformer Paralleling

If the transformers are identical and operating on the same tap position, then with circuit breakers 52-1 and 52-2, and bus tie breaker 24 closed, the total secondary bus load will divide equally between the transformers.

In this system example, no provision has been made for the special requirements of parallel operation. Each LTC will operate independently according to the command of the independent controls. To illustrate why this system is unsuitable for parallel operation, consider the following scenario.

Due to load changes, the voltage drops on the 13.8 kV bus:

1. Both LTC controls sense low voltage and start timing.
2. One control times out before the other, they cannot be exactly identical due to tolerances.
3. The LTC with the timed out control operates.
4. The 13.8 kV bus voltage comes into band after just one unit operates. The second unit no longer needs to operate since its voltage is now also in band. (Note that both VT's are monitoring the same voltage.) The transformer tap positions are now one step apart.
5. Once again, the load changes. The same sequence of steps 1 through 4 is performed, and the same transformer corrects the voltage again. The transformers are now operating on tap positions that are two steps apart.

Therefore, without some form of feedback or interaction between the LTC controls, the independently operating tapchangers will run to different tap positions.

Conditions When Transformer Tap Positions Are Not Identical

As illustrated in the above scenario, the tap position of two LTC transformers operating in parallel may differ, but why is that bad as long as the desired secondary bus voltage is maintained? The answer is that when the transformers are operating on different tap positions, there is a current that circulates between them which merely increases loss and transformer heating, while serving no useful purpose to the load.

In Figure C-2, the previously defined transformers are illustrated as operating on differing taps, one step removed from each other.

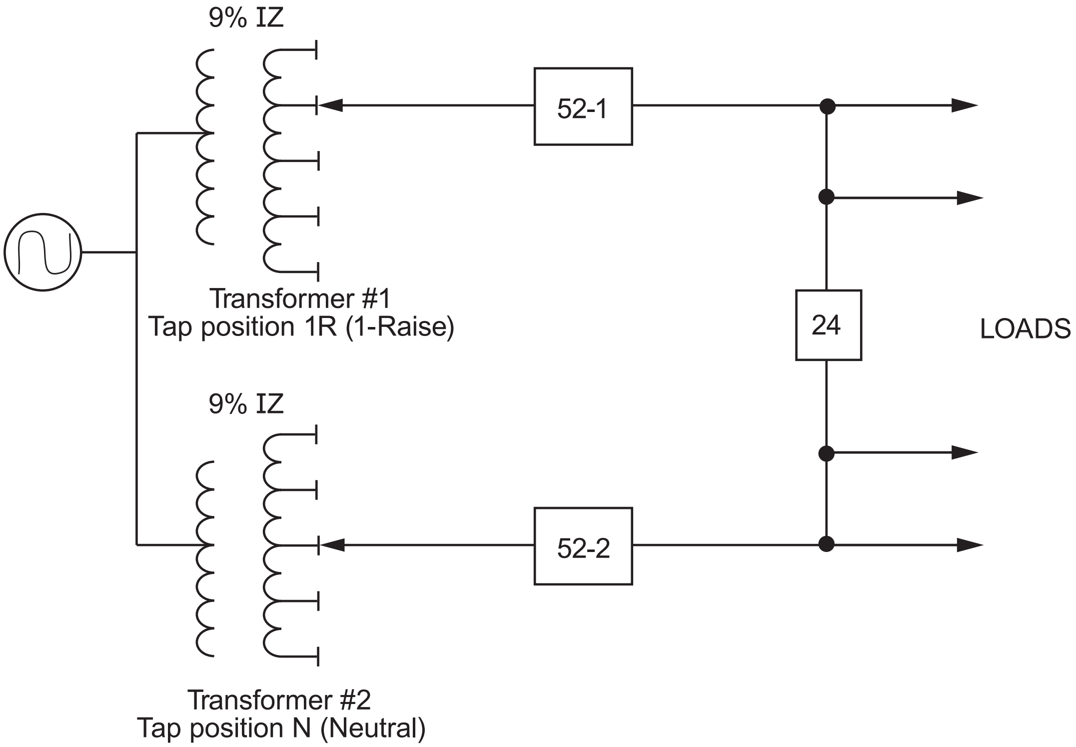

Figure C-2 Transformers Operating on Different Tap Positions

In this instance, the voltage difference between the two transformer secondaries will drive a circulating current which is limited only by the impedance of the two transformers. Since the transformer voltage change per tap is typically 5/8% (.00625 pu) the driving voltage for the current is:

$$V = .00625 \times \frac{13{,}800}{\sqrt{3}} = 49.8\ \text{V}$$

and the loop impedance is:

$$\begin{aligned}
Z_{\text{loop}} &= 2 \times Z_{\text{transformer}} \\
&= 2\left[9\% \times Z_{\text{base}}\right] \\
Z_{\text{base}} &= \frac{\text{kV}^2}{\text{MVA}} = \frac{13.8^2}{12} = 15.87\Omega \\
Z_{\text{loop}} &= 2 \times .09 \times 15.87 \\
&= 2.86\Omega\ \text{(reactive)} \\
&= j2.86\Omega
\end{aligned}$$

Therefore, the circulating current resulting from a one-step tap difference is:

$$I_{\text{CIRC}} = \frac{49.8\ \text{V}}{j2.86\Omega} = -j17.43\ \text{A}$$

This current exists regardless of the load. It is added to the load current to determine the total loading of the transformers.

Effect of Transformer Loading Due to Tap Difference

To further illustrate the problem, assume that the transformers are loaded at 10 MVA at 0.8 PF each and that their tap positions have digressed by four steps. A phasor diagram will reveal the situation.

1. Each transformer handles 10 MVA load at 0.8 PF:

$$I_{\text{LOAD}} = \frac{10{,}000\ \text{kVA}}{13.8\ \text{kV}\sqrt{3}} = 418\ \text{A} @ 0.8\ \text{PF}$$

$$I_{\text{LOAD}} = 334 - j251\ \text{A}$$

2. The current that circulates in the loop between the transformers:

$$I_{\text{CIRC}} = 4\ \text{steps} \times (-j17.43\text{A/step}) \cong -j70\ \text{A}$$

Since the circulating current effectively has no "real" component, but is purely reactive, consider the current as seen by the CT in one transformer as -j70 A and the other as +j70 A, due to the effective change of direction of current, or 180° phase shift in the two CTs. This is illustrated in Figure C-3.

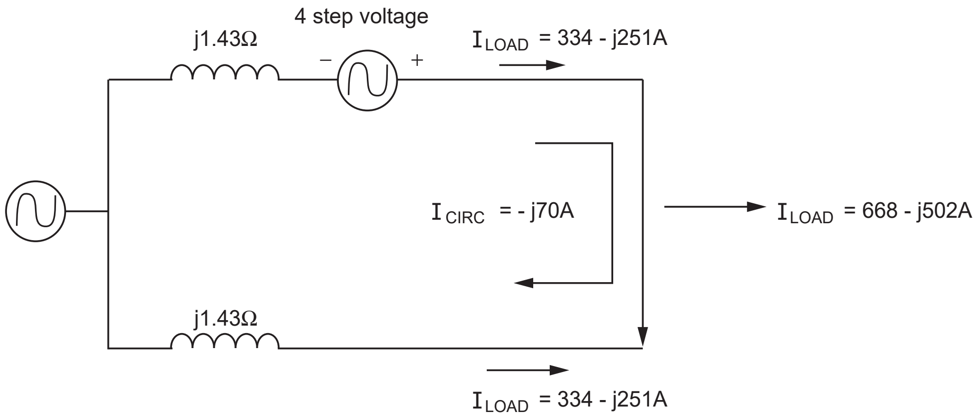

Figure C-3 Distribution of Currents Due to Load and Four-Step Tap Difference

3. The summation of the load and circulating currents is:

Transformer #1:

$I_{\#1}$ = Load Current + Circulating Current

$= 334 - j251 - j70 = 334 - j321 = 463\angle -44°$

Transformer #2:

$I_{\#2}$ = Load Current - Circulating Current

$= 334 - j251 - (-j70) = 334 - j181 = 380\angle -28°$

These phasors are plotted in Figure C-4. The through-put of the individual transformers is now:

$KVA_{\#1} = 13.8 \times \sqrt{3} \times 463 = 11{,}067$ kVA

$KVA_{\#2} = 13.8 \times \sqrt{3} \times 380 = 9{,}083$ kVA

For a total of 11,067 + 9,083 = 20,150 kVA, where the **load** represents only 20,000 kVA.

A similar calculation, considering that the transformer load loss is a function of I_2, shows that the total loss of the two transformers increases by about 2.8% because of the 70 A circulating current.

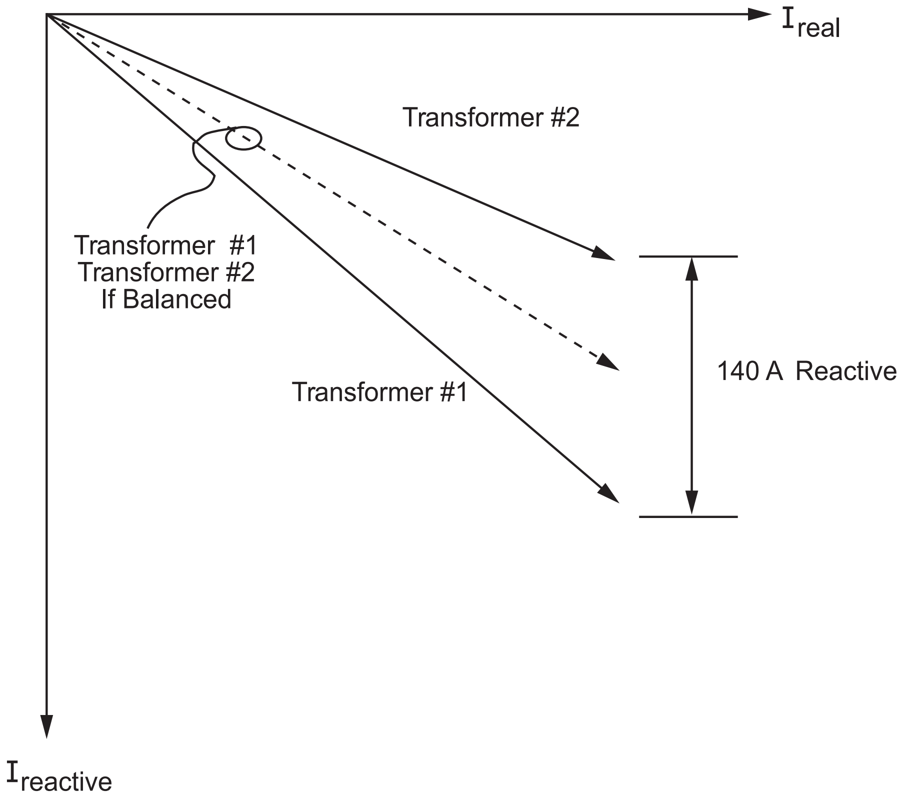

Figure C-4 Phasor Diagram – Currents in Transformers with Four-Step Tap Difference

PARALLEL BALANCER

One component, a parallel balancer, is essential to the proper operation of the system. It is the function of the parallel balancer, such as Beckwith Electric's M-0115A Parallel Balancing Module, to "separate" the unequal (or unbalanced) portion of the current in each transformer. The balancer then feeds the unbalanced current to each LTC control, which in turn, biases the control to issue tap change commands to reduce the unbalanced current.

A Fundamental CT Principle

Before describing the use of the parallel balancer, it is important to understand the basic underlying principle on which its operation is based.

Figure C-5 illustrates two current transformers with their secondary windings connected in series. The two CTs are identical. I_1 is the current "into polarity" of CT_1, and I_2 is the current "into polarity" of CT_2. Because the same current flows in the secondary of the identical CTs, $I_1 = I_2$. Keeping this basic principle in mind will simplify the explanation that follows.

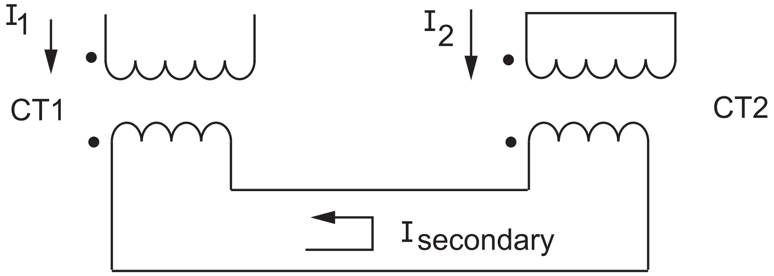

Figure C-5 Two Current Transformers with Secondary Windings in Series

Basic Parallel Balancer Requirements

The simplest use of a parallel balancer with two transformers is illustrated in Figure C-6. The circuit includes no accommodation for line drop compensation, nor any provisions to limit circulating current. The main CTs in the transformer-to-circuit breaker path are presumed to have 0.2 A secondaries, as required for use by the LTC controls (the "90" relays).

Therefore, as illustrated in Figure C-6:

1. The two K1 CTs are connected as illustrated in the fundamental principle described above, the secondaries are in series, so the primary currents must be equal.
2. If the currents through transformers T1 and T2 are equal, then the currents in the main CTs and in the primaries of K1-1 and K1-2 will also be equal, even if there is no alternate path for current via the balancing reactor and the I_p input of the control. In this case, there is no unbalanced component of current, and $I_u = 0$.
3. If the currents through transformers T1 and T2 are not equal, and there exists an unbalanced current I_u, as presumed to be due to a difference in LTC tap position, then the currents at the secondaries of the main CTs must also be unequal, reflecting the unbalance in the transformer loading. However, since the currents in the primaries of K1-1 and K1-2 *must still remain equal*, any unbalanced component of the load current will be forced to take the path which includes I_p input of the control in parallel with the reactor sensitivity adjustment.

■ **NOTE:** The adjustable tap on the reactor is only to control sensitivity by forcing more or less of the unbalanced current (I_u) into the I_p terminals on 90.

By tracing the path of this unbalanced current, observe that the direction of the current (the polarity) is opposite in the two controls. This polarity difference is the foundation for a positive or negative bias being applied to the control to run the tapchangers.

In Figure C-6, I_b represents the desired balanced components of the current. I_u is the unbalanced portion of the current, that portion which is circulating in the local power system between the transformers. These quantities are shown in the power and control circuits without regard to CT scaling.

■ **NOTE:** For the currents to satisfy Kirchoff's laws, Ib or the balanced component *only* flows in K1; the unbalanced portion I_u *only* flows in the I_p circuit of the controls.

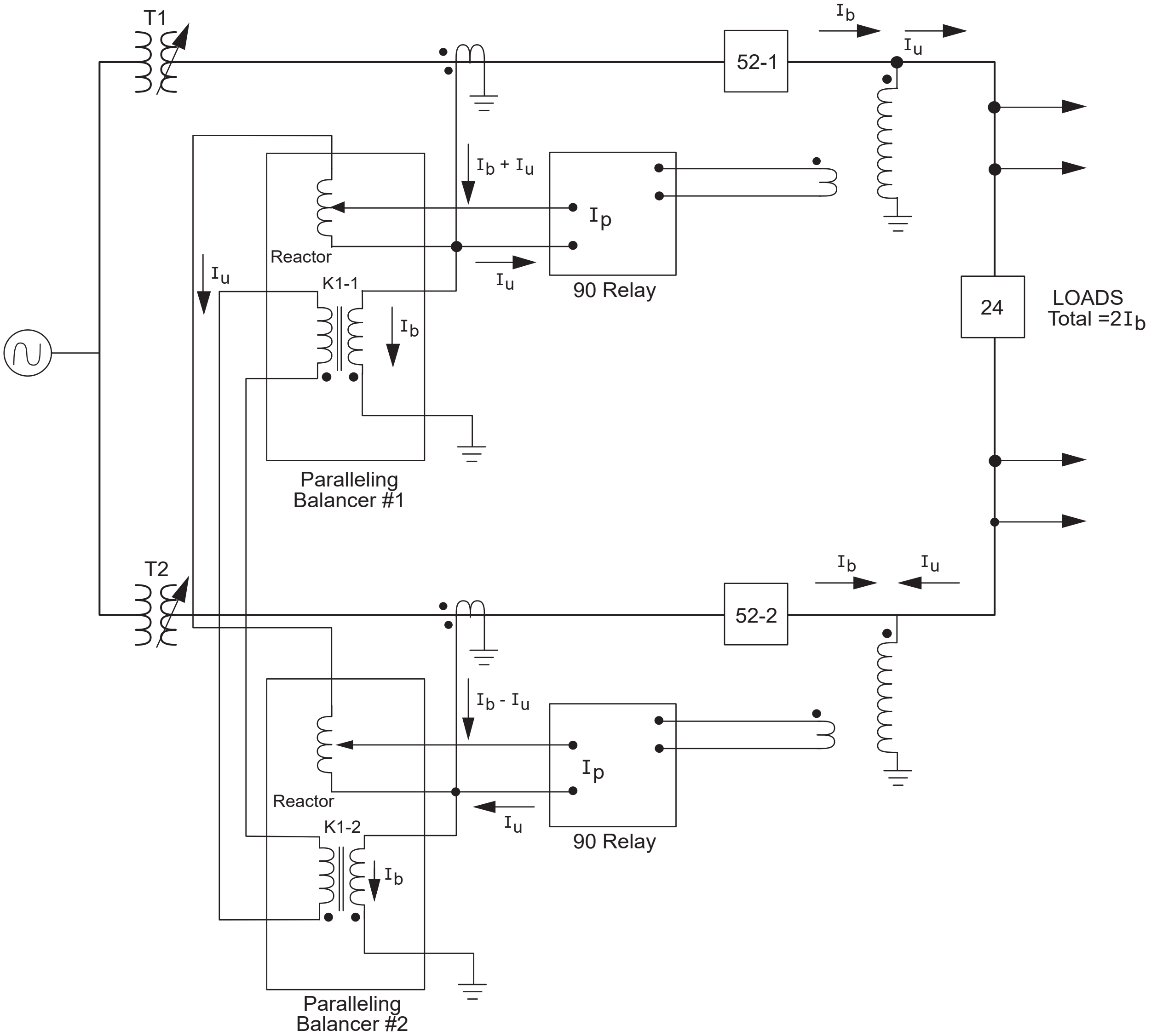

Figure C-6 Minimal Circuit for Transformer Paralleling by Circulating Current Method

C.3 Using Line Drop Compensation

Another level of complexity in the circuit is required to accommodate Line Drop Compensation (LDC). The special situation when the transformers are intended for use in parallel, but one is taken out of service, must be taken into account. If the currents I_b (in K1-1 and K1-2) were simply passed through the LDC circuit of each of the 90 relays, $2I_b$ would pass through the control on T1 when T2 is out of service. The problem in this situation, is that $2I_b$ in *one* control's LDC circuit will result in *two times* the compensation intended for that unit, with the possibility of an overvoltage condition at the secondary bus.

To avoid this situation, a second CT (K2) is provided in the parallel balancer. K2 is configured like K1, in that the primary currents *must be equal*. Figure C-7 illustrates the new portion of the circuit. Only minor changes are required to accommodate a circuit which will force the balanced component of current only, through the LDC path of the 90 relay. Figure C-7 and Figure C-8 show the circuit with K2-1 and K2-2 along with realistic current values.

As illustrated in Figure C-7:

- The main power circuit CT ratios are 1000:0.2 A
- The total load current is 1000 A at 1.0 PF
- The transformers are operating in parallel on different tap positions. Transformer #1 (T1) is on a tap position two steps higher than Transformer #2 (T2)

The resulting currents are shown in the Figure. The example is simplified for illustration by stating that the load is at unity power factor, meaning that all of the balanced component of current can be shown as real (—>) and all of the unbalanced or circulating component is shown as reactive (—+►).

1. The 1000 A of load current divides evenly between T1 and T2 at 500 A each. This is reduced to 0.1000 A (real) in the CT secondaries.
2. The real 0.1000 A, representing the balanced portion in each circuit, passes individually through K1 and K2 of each balancing reactor and the appropriate LDC circuit of the 90 relay. The return path is to the same CT secondary.
3. The unbalanced or circulating component of current will be 2 steps x 17.43 A per step 35 A reactive, or 0.007 A on the base of the CT secondary.

Notice that the direction, or sense, of the unbalanced current is opposite in the two line CTs. This is broken out at the node before K1. A portion of this current, depending upon the parallel balancer sensitivity adjustment, is forced through the I_p terminals of the control. The 0.007 A flows to Balancer #2 where the same current passes through Balancer #2's reactor into the I_p input of the second control with the opposite polarity. The return path to close the circuit for this current is between the ground of the CT secondaries. The unbalanced current passing in different directions, or sense, through the controls causes those controls to lower the tap of T1 and raise the tap of T2.

In the example illustrated in Figure C-8, circuit breaker 52-2 is assumed to have opened, forcing the total 1000 A load into T1. The resulting currents are shown in the Figure. Therefore, with a unity power factor load and no transformer in parallel to possibly operate on a different tap position, the total current is the 1000 A real component. Figure C-8 also illustrates paths which will be opened or shorted by the breaker status contacts when 52-2 opens. This situation is explained further in the next section "Parallel/Independent Operation".

Note that a short circuit across the K1 secondaries, eliminates the requirement that the K1-1 and K1-2 currents be identical in both of the K1 CTs. This permits 0.2000 A to flow in K1-1 while there is no current in K1-2 at the node between K1-1 and K2-1. The 0.2000 A current divides in half; 0.1000 flows through K2-1 and the other 0.1000 flows over to T2 and goes through its K2-2. The result is that the line drop compensation circuit of T1 continues to receive 0.1000 current, the same as before T2 was disconnected. The output voltage of T1 will not be overcompensated and will stay within the limits established, based on T1 and T2 operating in parallel.

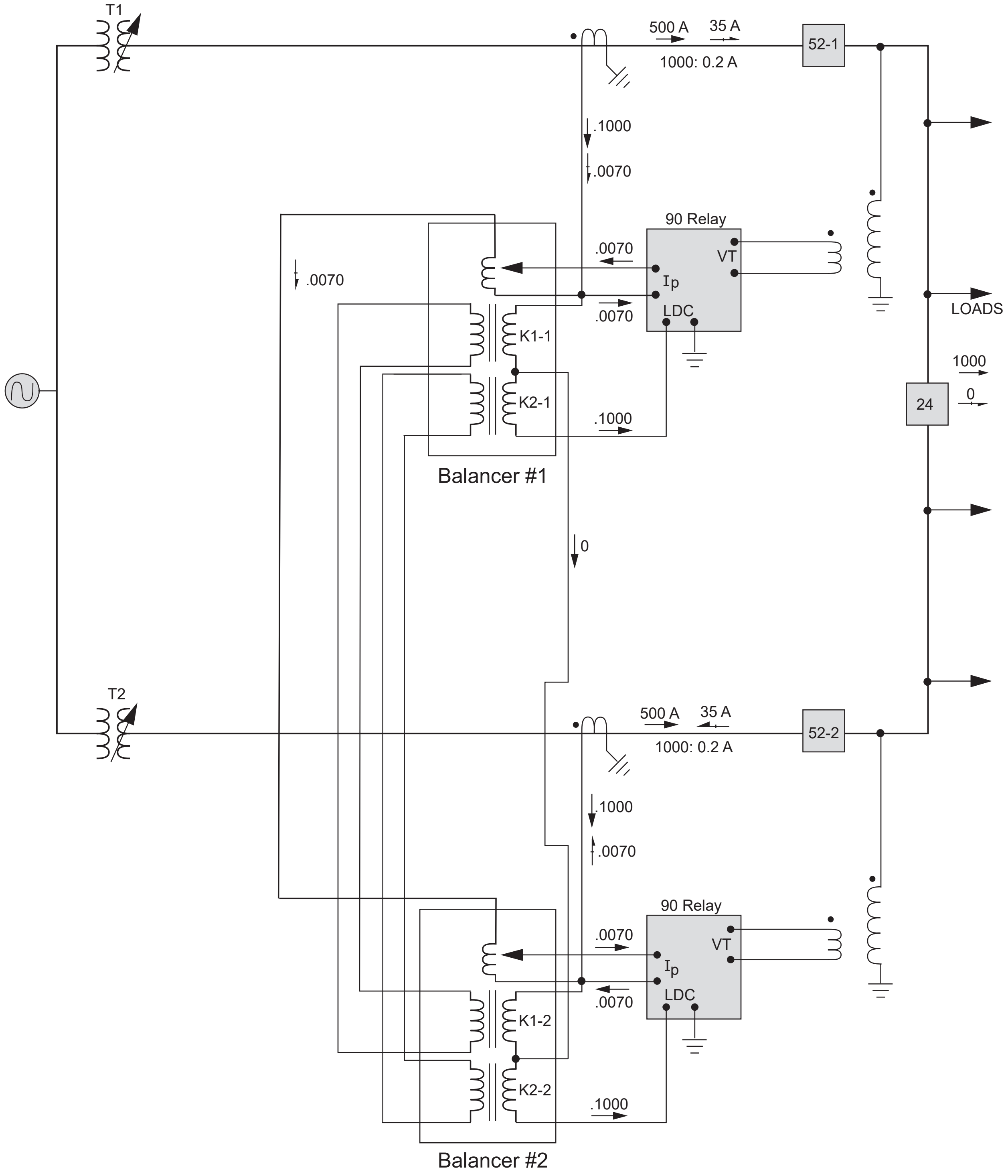

Figure C-7 Circuit for LTC Transformer Paralleling by Circulating Current Method, including the Provision for Line Drop Compensation

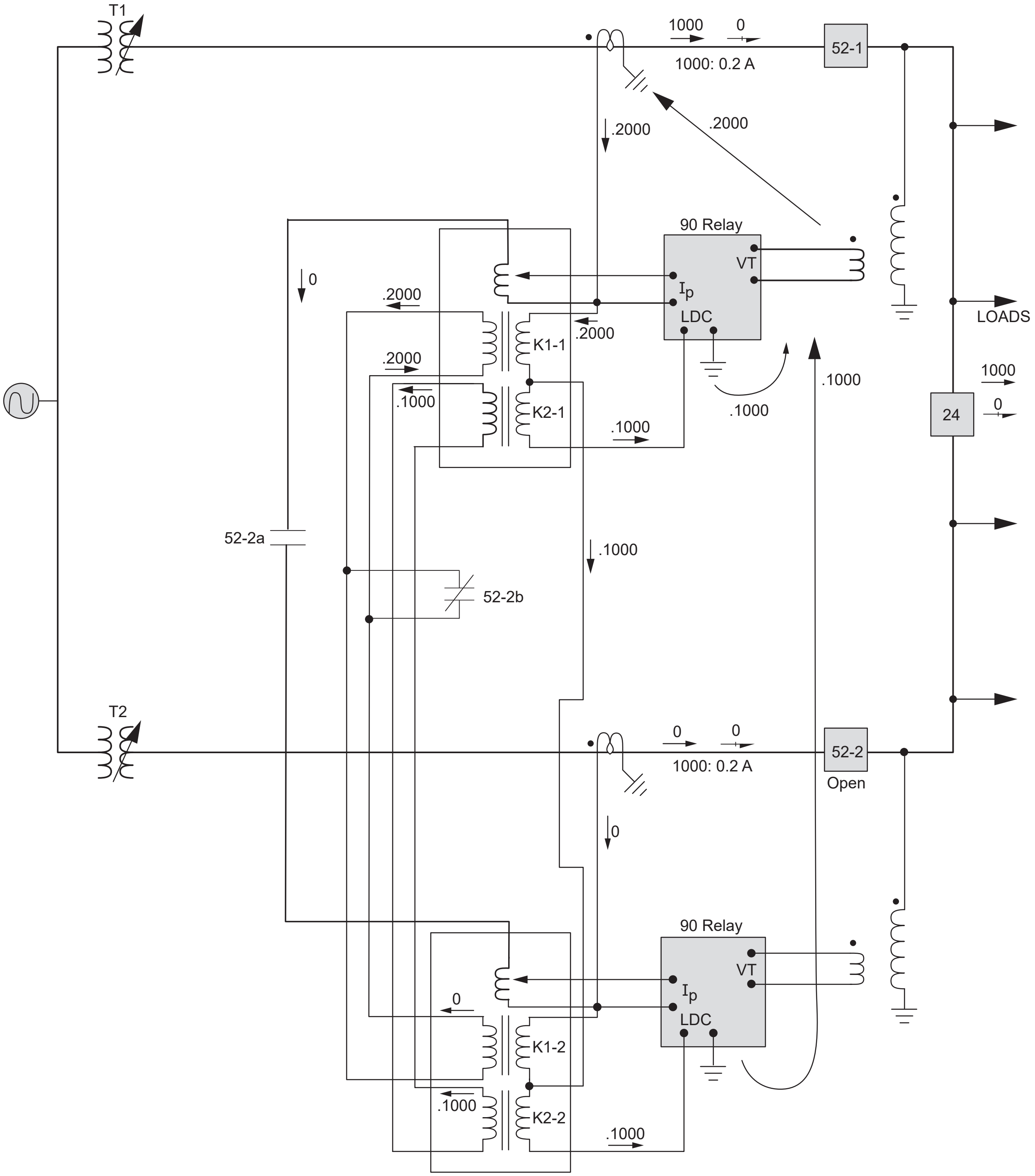

Figure C-8 Circuit for LTC Transformer Paralleling by Circulating Current Method – Purpose of K2 for Line Drop Compensation

C.4 Parallel/Independent Operation

The circuit developed thus far assumes that only two transformers are involved, and that they will always be operated in parallel with each other. However, one transformer may occasionally be removed from service and the other must continue to operate independently. In this condition, the circulating current paths must be removed from the control and the parallel balancer of the out-of-service transformer.

In Figure C-9, the circuit is illustrated to include a set of switch contacts, defined as follows:

- **43P –** A total of four contacts in each parallel balancer. The contacts are switched for **parallel** or **independent** operation. Two contacts are closed and two are open during parallel operation, the positions are reversed during independent operation.
- **52-1a –** An auxiliary contact associated with circuit breaker 52-1, which is open when 52-1 is open and closed when 52-1 is closed.
- **52-1b –** An auxiliary contact associated with circuit breaker 52-1, which is closed when 52-1 is open and open when 52-1 is closed.
- **52-2a, 52-2b, 24a, 24b –** Contacts on the respective circuit breakers with the definitions of "a" and "b" described for circuit breaker 52-1 above.

An additional modification is introduced in Figure C-9, in that the circulating current paths for the secondaries of K1 and K2 are not shown as complete hardwire connections. Those paths are shown completed using ground connections, as this will be the common practice in some utilities.

Figure C-9 illustrates the switch contacts assuming that the two transformers are operating in parallel with circuit breakers 52-1, 52-2 and 24 closed. Also, the parallel/independent switch on the balancing module is set for parallel operation.

Three other conditional modes of operation are possible.

Condition 1 – Due to the opening of circuit breaker 52-1 or 52-2, the controls must operate to allow the continued proper regulation of the load, using only the one remaining transformer which is handling the total load, but its line drop compensation circuit only receives one-half of the total load.

Condition 2 – Due to the opening of circuit breaker 24, the controls must operate to handle their respective loads independently, not in parallel.

Condition 3 – Due to operator local selection of independent operation, the controls must operate independently, even though in the actual circuit itself, the transformers may remain in parallel. In most cases, this mode of operation would only be used for testing the system.

To ensure the correct circuit paths are present for each of these three conditions, the user may print copies of Figure C-9 to markup the auxiliary contact designations associated with each condition, to verify that the currents flow through the correct paths.

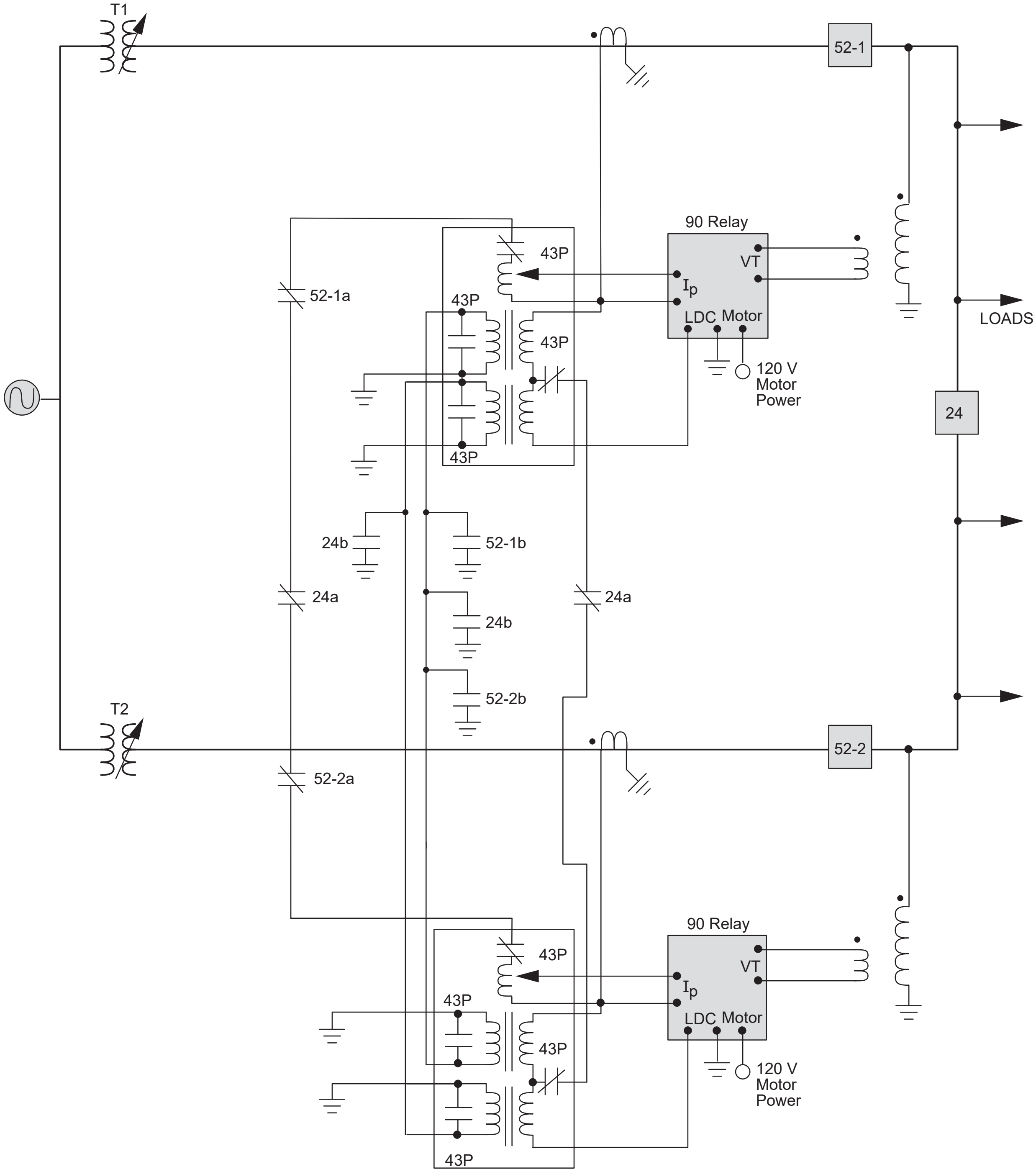

Figure C-9 Circuit for LTC Transformer Paralleling by Circulating Current Method, including Circuit Breaker Auxiliary Switch Contacts

C.5 CT Correction and Circulating Current Limit

Two additional components complete this two transformer paralleling circuit: an auxiliary CT, and a current relay to limit circulating current.

Auxiliary CT – The standard for the current transformer secondary inside of the LTC transformer is 5.0 A, however, the standard input for the LTC control is 0.2 A. An auxiliary CT is required to provide the correct current level. Note that step-voltage regulators most often use 0.2 A CT secondaries, eliminating the need for an auxiliary CT in those applications.

AC Current Relay – When the circulating current becomes too great, it is often required that additional tap change operations are inhibited. This is based on the assumption that the circulating current is high because the transformers are already too many steps apart due to some malfunction, and a further digression of the tap positions should be prevented. This is easily accomplished by adding a current magnitude sensitive relay in the path that monitors the circulating current. Excessive circulating current opens a normally closed contact on the "50" device, which then opens **ONLY** the automatic motor power source circuit to the 90 relays.

The final figure (Figure C-10) adds these two components and illustrates the complete circuit.

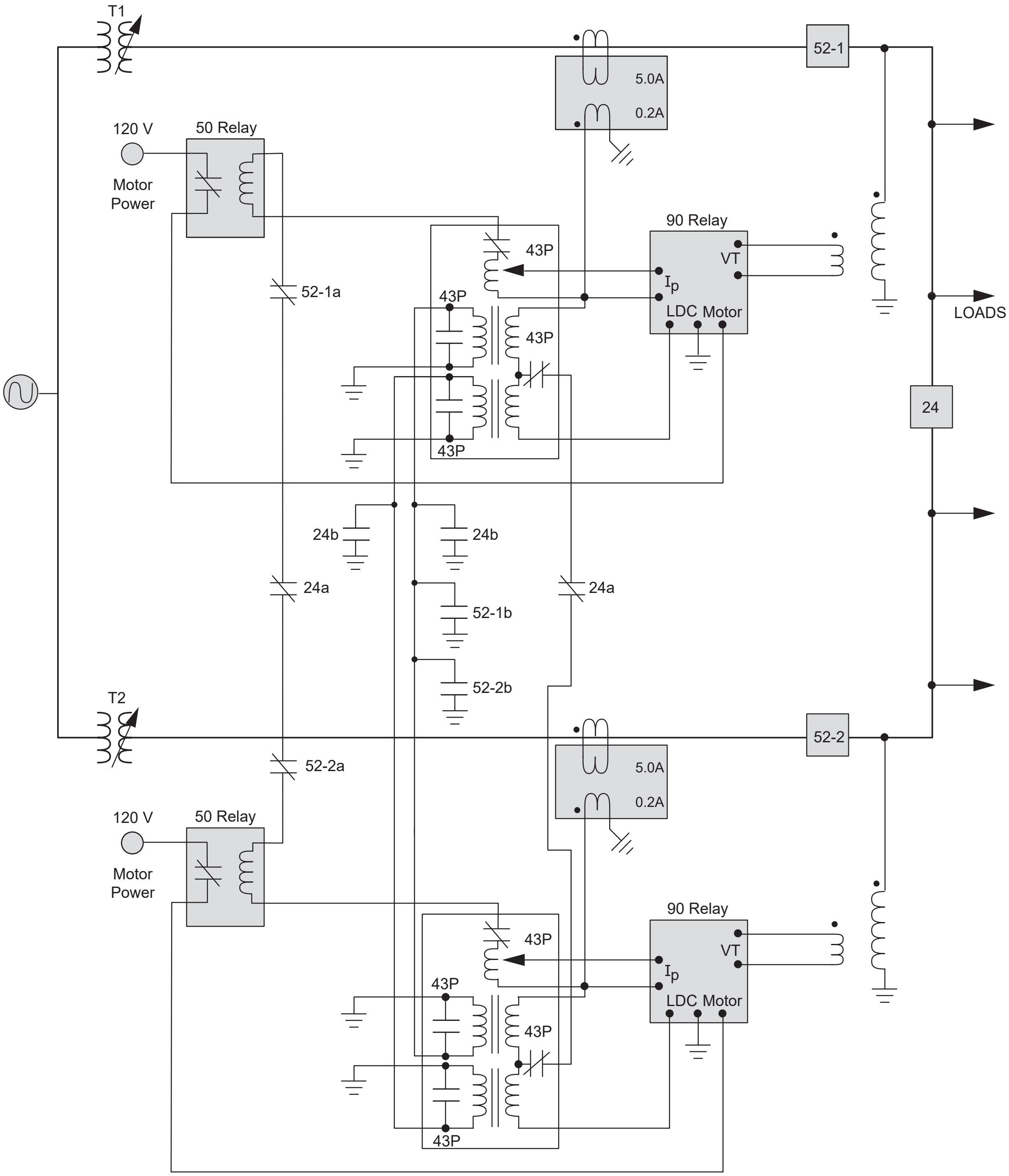

Figure C-10 Complete Circuit for LTC Transformer Paralleling by the Circulating Current Method

This Page Left Intentionally Blank

D

Advanced Circulating Current Paralleling Method

■ **NOTE:** REPLACES Beckwith Electric Application Note #13.

D.1 Overview

Paralleling of LTC transformers by the Circulating Current Method may involve systems that are much more complex than the basic scheme of two identical transformers operating in parallel, as defined in Appendix C. While most systems are covered by that definition, there are also installations with the following:

- More than two transformers
- Transformers which are very different in their electrical characteristics

The basic approach defined for two identical transformers is readily expanded to three (or more) transformers in parallel. In addition, with special considerations, this approach can be applied to transformers of unequal rating or asymmetric configuration. Other applications must be evaluated with a sound understanding of the basic principles, in order to assess the possibility of paralleling the transformers using the Circulating Current Method.

The basic premise for LTC transformers operating in parallel is simple:

- The transformers must continue their basic function of controlling the load bus voltage as prescribed by the setting on the control.
- The transformers must act to minimize the current which circulates between them.

In addition:

- Installations with more than two transformers in parallel must continue to divide the load between all remaining transformers when one (or more) is removed from service.
- The transformers must act to minimize the current which circulates between them, that may be due to mismatch in the design of those transformers.

D.2 Application

The progression of the system application to three or more transformers, is a straightforward continuation of Appendix C. The issue of mismatched transformers can be more involved. A few common situations will be examined.

THREE OR MORE IDENTICAL TRANSFORMERS IN PARALLEL

Three Identical Transformers In Service with an Evenly Distributed Load

To continue from Appendix C, Figure C-9 "Circuit for LTC Transformer Paralleling by Circulating Current Method, including Circuit Breaker Auxiliary Switch Contacts", the basic system for three parallel transformers will define a circuit that includes: the LTC control (the "90" relay), the Parallel Balancing Module, and the circuit breaker auxiliary "a" and "b" contacts. The Overcurrent Relay ("50") and the Auxiliary CT are not included in this system definition.

The schematic illustrated in Figure D-1 is a straightforward extension of the two transformer application. To envision the circuit connection changes, assume that Transformers 1 and 3 are configured the same as Transformers 1 and 2 in the two transformer example in Appendix C. The third transformer has simply been placed between them.

Current magnitudes as shown in Figure D-1 assume that there is a 1500 A unity power factor load on the system. There is a reactive current of 35 A in T1, because it is on a tap position higher than T2 and T3. Because the load is taken as 1.0 power factor, it is easy to distinguish the control circuit currents which are due to the load (the real components) and those currents which are due to circulating current (the reactive components). As expected, the load current portion is accommodated independently within the control circuit of each transformer, whereas the circulating current interacts between the controls. In this illustration, there is twice as much current in the paralleling input of the 90 relay of T1 as in the 90 relays of T2 and T3. The tap position on T1 will tend to lower, whereas the tap positions on T2 and T3 with twice the bias, will tend to raise.

Two Out of Three Transformers In Service with an Evenly Distributed Load

Figure D-2 illustrates the "a" and "b" contacts when circuit breaker 52-3 is open (Transformer #3 is out of service), where the load is unchanged and the reactive (circulating) current in T1 remains 35 A. The Parallel Balancer associated with T3 is removed from the circuit, except for the Line Drop Compensation current. The closing of contact 52-3b allows there to be no current in the upper CT of the T3 Parallel Balancer. The result is that transformers T1 and T2 operate properly in parallel, but their respective LDC circuits continue to recognize only one-third of the total load current.

Three Transformers In Service with a Load Bus Tie Opened

The complete circuit diagram also needs to illustrate the condition when the "52" breakers are closed, but breaker 24-2 has been opened in the bus. Figure D-3 illustrates the auxiliary switch contacts for this condition, where the load on T3 has been raised to 600 A to clearly show the isolated path.

As defined, with a unity power factor load and no opportunity for circulating current, there can be no reactive component of current in T3. The T3 transformer operates independently of T1 and T2.

Presuming the same 35 A circulating current is driven by the unequal tap positions, resulting in the current paths shown for T1 and T2, it should be noted that the portion of the diagram that consists of T1 and T2, is identical to that of Figure C-7 as illustrated in Appendix C.

More Than Three Transformers Connected In Parallel

In principle, any number of identical LTC transformers may be operated in parallel using the Circulating Current method. At least one utility operates many substations with four transformers in parallel. The user may expand on Figure D-1 through Figure D-3 to add transformers, considering certain combinations of open circuit breakers and defining the load and circulating current path.

Complete Circuit with Auxiliary CT and AC Current Relay

In Figure D-4, three auxiliary 5.0 A to 0.2 A CTs and three AC Current Relays are added to form the complete circuit. In the two transformer case, there may be a question as to why two such relays are required, since being in series, they are redundant. In fact, one such relay per transformer is only required when there are three or more involved. Referring back to Figure D-1, note that the coil current of the "50" device is 0.0070 A for T1, but only 0.0035 A for each coil current of T2 and T3. Since T1 is the unit digressing from the others, it is appropriate that its LTC is disabled first. This will be the case if all of the current relays are set the same. The bias of T2 and T3 in Figure D-1 is such as to raise their tap position, which will tend to bring them into conformity with T1 as the bus voltage and settings of the "90" relays may dictate.

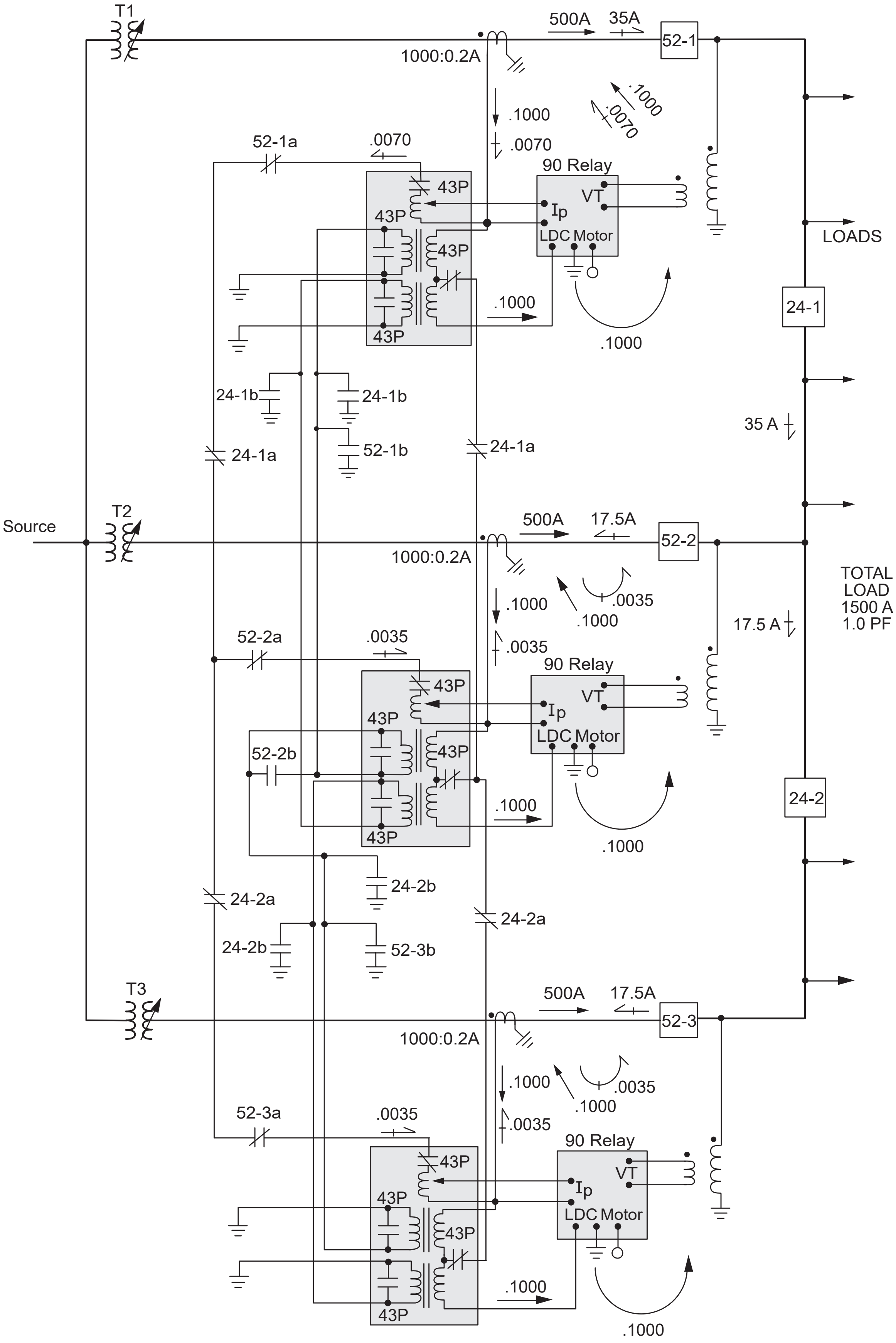

Figure D-1 Basic Circuit for Three LTC Transformer Paralleling using the Circulating Current Method, including Circuit Breaker Auxiliary Switch Contacts

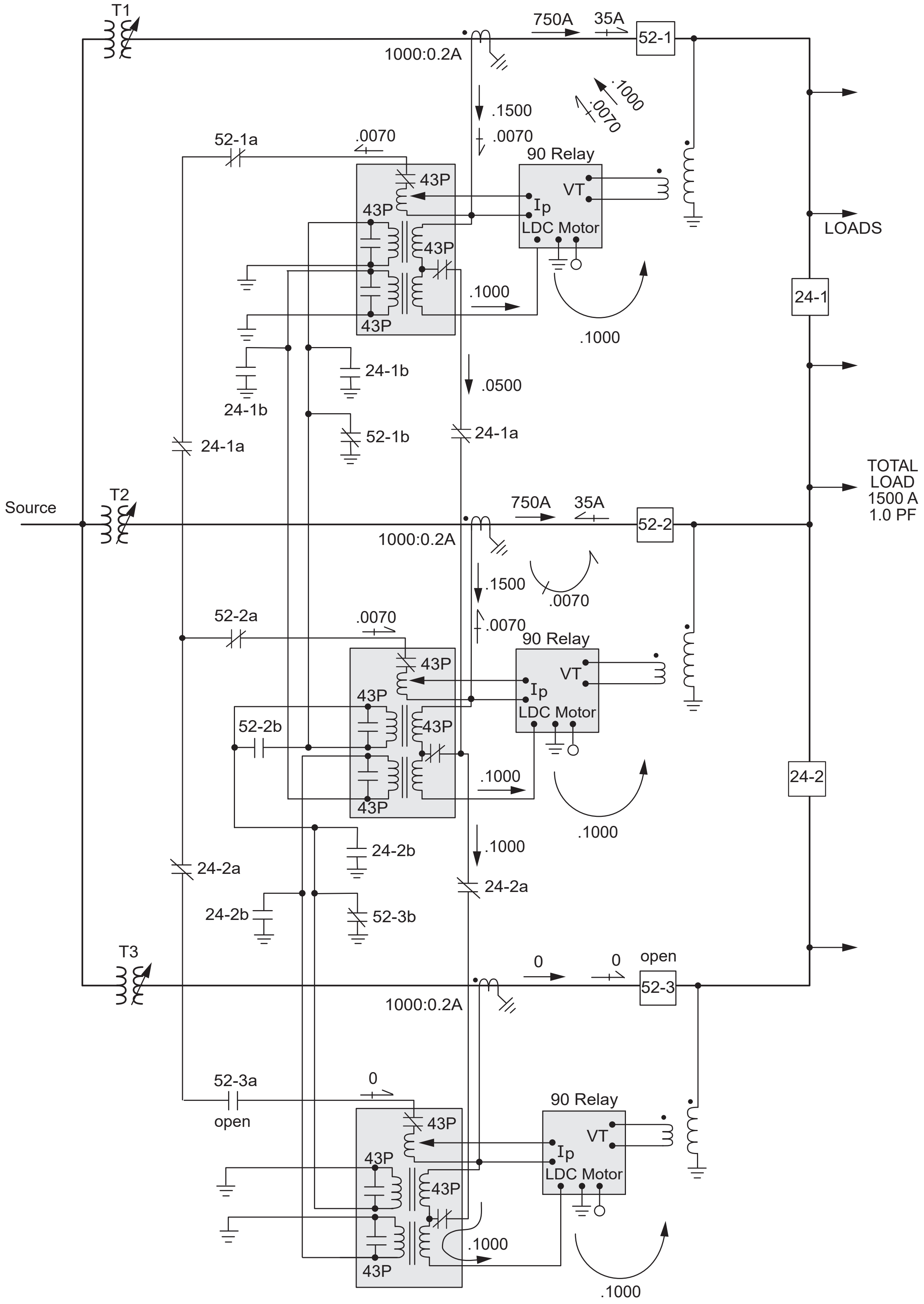

Figure D-2 Basic Circuit for Three LTC Transformer Paralleling using the Circulating Current Method, with Transformer #3 Out of Service

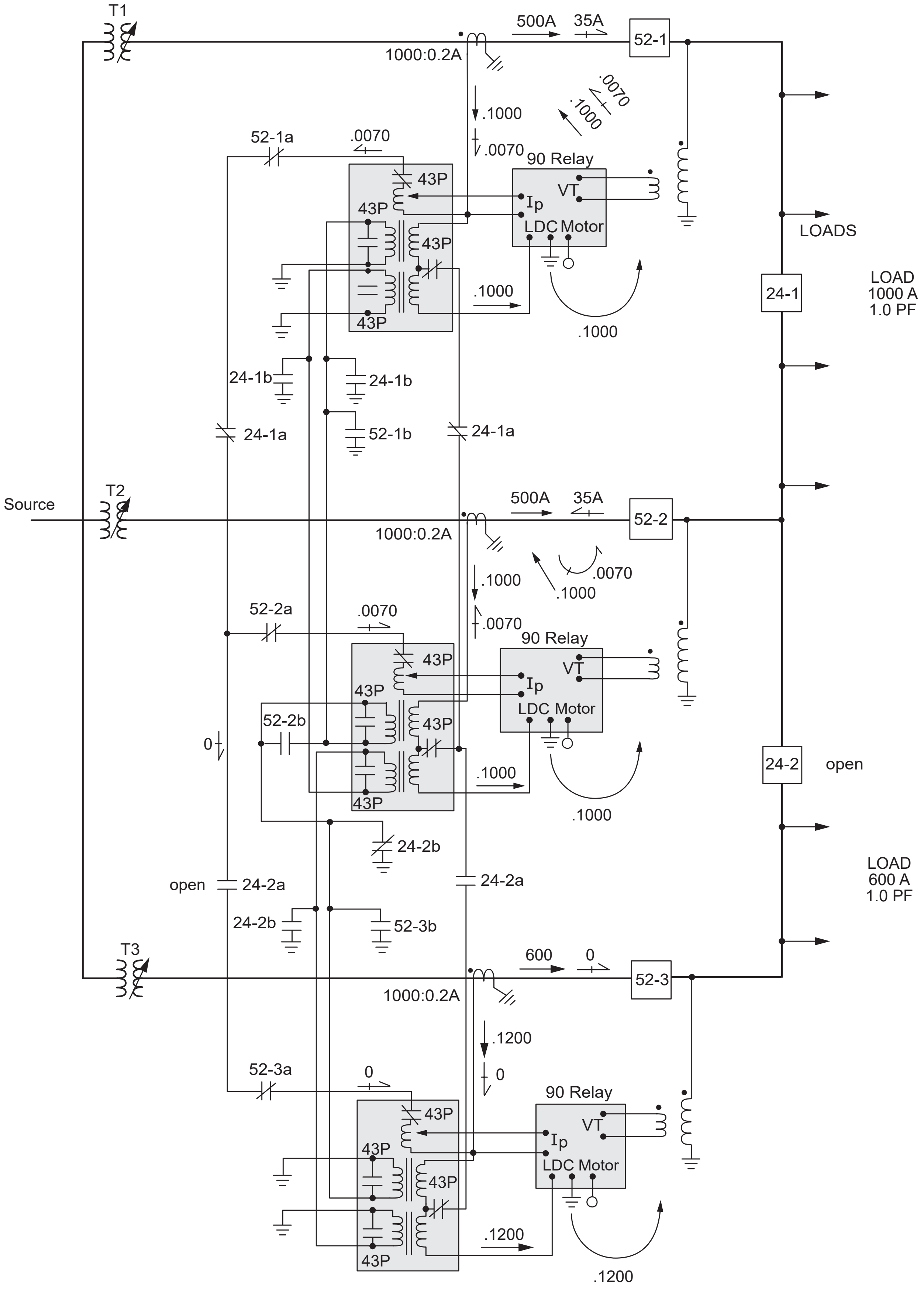

Figure D-3 Basic Circuit for Three LTC Transformer Paralleling using the Circulating Current Method, with Bus Tie Breaker 24-2 Open

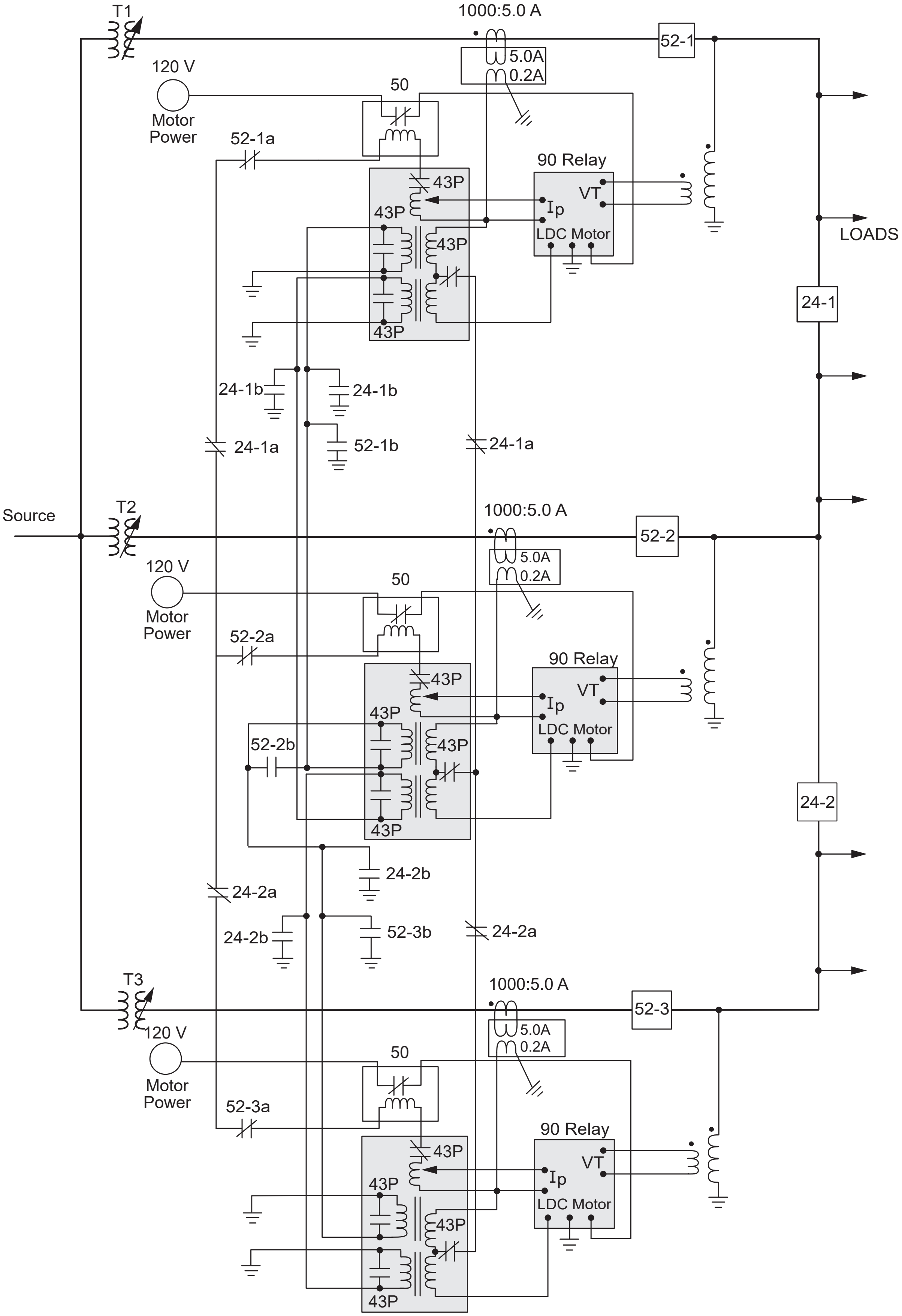

Figure D-4 Basic Circuit for Three LTC Transformer Paralleling using the Circulating Current Method, including Auxiliary CTs and AC Current Relays

UNEQUAL TRANSFORMERS IN PARALLEL

Basic Requirements

Before attempting to operate two LTC transformers in parallel, it must first be established that the transformers exhibit essentially the same voltage ratio and identical line phasing; otherwise, paralleling is not possible.

1. Two transformers might have slightly different voltage ratios. For example, one is rated 13.8 kV and the other 13.2 kV on the secondary. These can be used in parallel after adjusting no-load taps, if available, to obtain identical turns ratio, or by recognizing that the transformers will find optimum operating load taps which will not be the same on the two units.
2. It is required that line phasing be nominally identical. The two transformers must exhibit the same phase shift, primary to secondary. Wye-wye or delta-delta banks will be configured for zero phase shift, but note that wye-delta and delta-wye banks will be bussed to exhibit a shift of 30°. Therefore, it is not possible to operate a wye-wye or a delta-delta bank in parallel with a wye-delta bank. The resulting 30° phase shift difference of the banks would result in a heavy real (not reactive) circulation of power between the transformers.

Two Transformers of Equal kVA with Unequal Impedance – The Basic Problem

Two transformers operated in parallel on equal voltage tap positions will be loaded inversely as their impedances, or inversely as their per unit impedances, when expressed on the same base.

To emphasize this point, consider two 12 MVA transformers, T1 of 6% `IZ` and T2 of 12% `IZ`, connected in parallel as shown in Figure D-5.

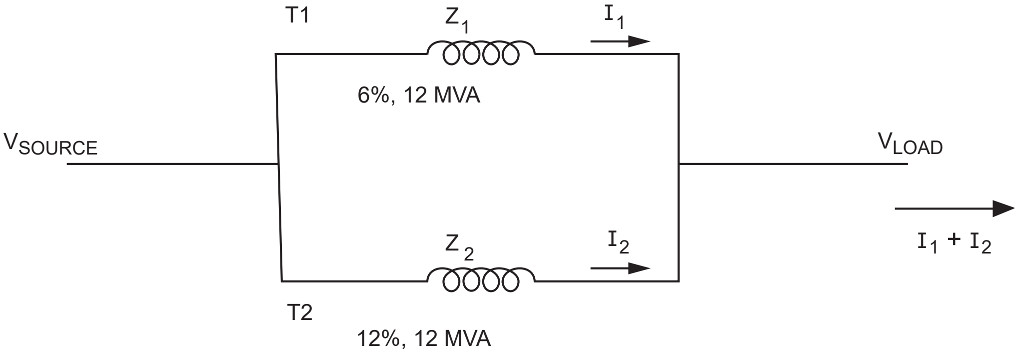

Figure D-5 Two Transformers of Unequal Impedance in Parallel

A phasor diagram, Figure D-6, reveals the voltage and current relationships where, for illustration, a 0.966 lagging power factor load is presumed ($I_1 + I_2$ lags V_{load} by 15°).

Since ($V_{source} - Z_1I_1 = V_{load}$) and ($V_{source} - Z_2I_2 = V_{load}$), it is evident that $Z_1I_1 = Z_2I_2$.

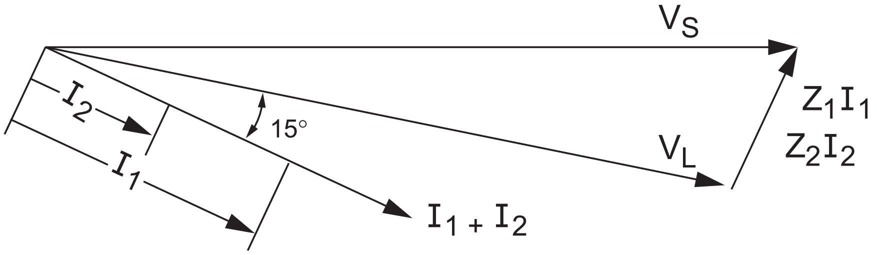

Figure D-6 Phasor Diagram for Two Transformers of Unequal Impedance in Parallel

Since Z_1 and Z_2 are both taken to be pure reactances, I_1 and I_2 will be in phase with each other. In order to satisfy the system: $I_2 = (1/2)\ I_1$.

The problem is that both transformers are rated for 12 MVA, but the circuit impedances define a system where T2 will be loaded to only one-half that of T1. Therefore, when T1 is fully loaded, T2 is loaded at only 50%; conversely T2 cannot be loaded to its capacity without severely overloading T1.

It is sometimes suggested that this shortcoming could be circumvented by simply operating T2 on a higher voltage tap position, i.e., a tap position which would boost the output of T2 so that the currents I_1 and I_2 are made equal, thereby making it possible to load to the rating of both transformers. A circuit designed to attempt this solution is illustrated in Figure D-7, which is identical to Figure D-5, but includes a voltage boost V_2, on transformer T2. The phasor diagram is now more complex, and must be resolved recognizing the following relationships:

- The load power factor has not changed, therefore $\vec{I}_1 + \vec{I}_2$ continues to lag V_{load} by 15°
- $V_{source} - Z_1 I_1 = V_{load}$
- $V_{source} + V_2 - Z_2 I_2 = V_{load}$

Further, the objective is to make $|I_1| = |I_2|$, which then requires that since $Z_2 = 2Z_1$, that $|Z_2 I_2| = 2|Z_1 I_1|$.

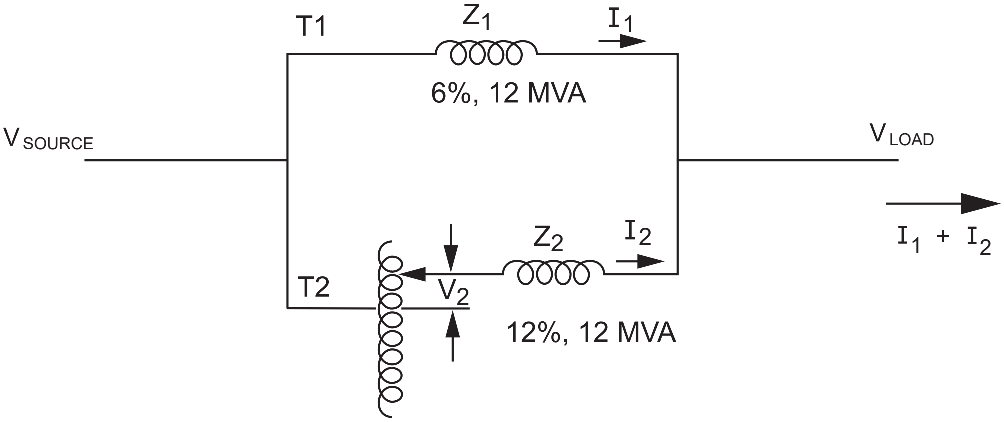

Figure D-7 Two Transformers of Unequal Impedance and Tap Position in Parallel

Figure D-8, (same scale as Figure D-6), reveals the solution where all phasors satisfy the problem definition. Therefore, while I_2 has been made equal in magnitude to I_1, they are grossly out of phase with each other. The fact that I_1 is now a leading current, is indicative of a very large circulating current between the transformers. Since the circulating current method of paralleling is based on the differences in I_1 and I_2 (magnitude and phase), and since the phasing of I_1 and I_2 are very different in Figure D-8, this solution is inoperable, as it does not represent a valid solution for the paralleling balancer method. Therefore, in principle, two transformers with unequal impedance should not be operated in parallel. However, some discrepancy in impedance can be tolerated. As a general rule, parallel operation is possible when the impedances of the two transformers expressed on the same base are within 7.5% of each other.

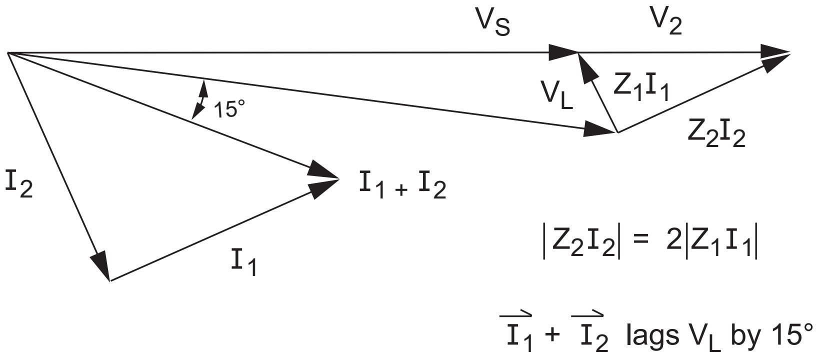

Figure D-8 Phasor Diagram for Two Transformers of Unequal Impedance with Equal Current Magnitudes

Paralleling Transformers of Unequal kVA Rating or Impedance

Keeping in mind the previous conclusion, it is also common that there may be two transformers, of different manufacture or age, which have significantly different kVA or impedance nameplate ratings. The objective is to load them in parallel in order to avoid the capital expenditure of a new transformer.

When the transformers have different ratings or impedance, the objective is not to load each transformer to its rating. The objective is to divide the load between the two, in parallel, according to the kVA of each, adjusted so that the impedances are numerically equal when expressed on the individual unit base.

As an example, two realistically sized transformers are illustrated in Figure D-9.

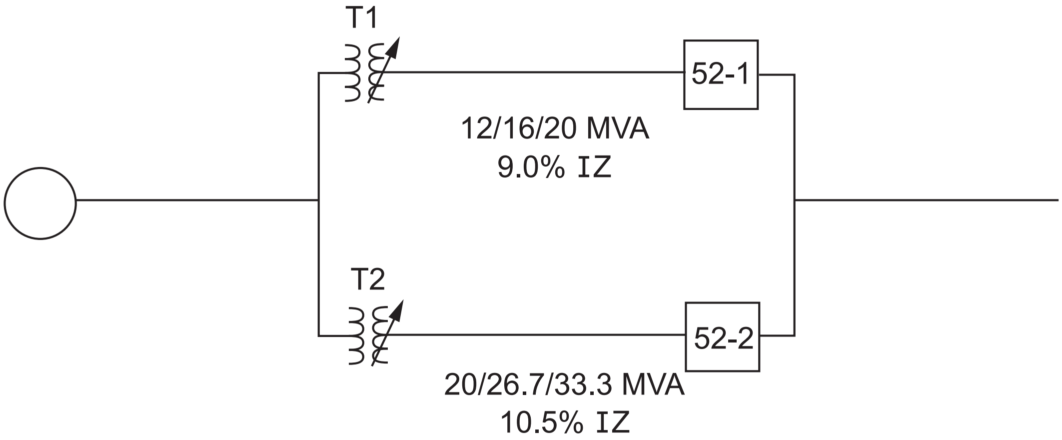

Figure D-9 Two Realistic Transformers of Unequal Rating

Recognize that the percent impedance voltage of power transformers is based on the self-cooled (OA) rating, therefore:

T1: IZ = 0.090 per unit on 12.0 MVA base

T2: IZ = 0.105 per unit on 20.0 MVA base

Since the transformers do not exhibit the same impedance on their design OA bases, it must first be determine the rating that may be effectively applied to each transformer, if the % IZ's are made equal. Since the percent impedance varies on the MVA base (presuming equal voltage ratios), it follows that:

1. In reference to the 9.0% IZ on 12 MVA base of T1

   T1: 0.090 pu IZ on 12.0 MVA base

   T2: (0.090/0.105) x 20 MVA = 17.14 MVA

   T2: 0.090 pu IZ on 17.14 MVA base

   If T1 is fully loaded, T2 is loaded to less than its rating.

2. In reference to the 10.5% IZ on 20 MVA base of T2

   T1: (0.105/0.090) x 12 MVA = 14.0 MVA

   T1: 0.105 pu IZ on 14 MVA base

   T2: 0.105 pu IZ on 20 MVA base

   If T2 is fully loaded, T1 is loaded in excess of its rating

Therefore, when the transformer impedances are stated as the same per unit value, transformer T2 is effectively rated only 43% higher than T1, instead of the 67% which is indicated by their nameplates. Accordingly, it is in this 1.43:1 ratio, that T2 should be loaded relative to T1 when they are operated in parallel.

The rating of T1 will establish the rating of the bank (kVA T1 + 1.43 kVA T1 = 2.43 kVA T1), because to base the bank on the rating of T2 would overload T1. Therefore, the objective becomes effectively making the rating of T2 to be 1.43 x 12 MVA = 17.14 MVA, rather than 20 MVA.

Accomplishing this requires knowledge of the configuration of the current transformers (CTs) monitoring the load current. Examples of possible CT/VT configurations are presented in **Section D.3 Instrument Transformer Configuration**.

Presuming the VTs and CTs used in each transformer are compatible, it is necessary to scale the CT input of the LTC control on T2, so that its base is 1.43 times that of T1. Namely, when loaded to 12 x 1.43 = 17.14 MVA, the CT on T2 should produce the same current magnitude signal as T1, when T1 is loaded to 12 MVA. Once this is satisfied, the paralleling equipment will recognize a balanced situation when the transformers are loaded in the ratio of T2 to T1 = 1.43.

Since T1 remains the basis, it is reasonable to use the CT in T1, and modify only the CT in T2. Figure D-10 shows the system, including CT ratios, which might be found based only on the transformer rating. Note that T1 will be overloaded if the total load exceeds 2.43 times the rating of T1. Additional equipment could be applied to detect this condition.

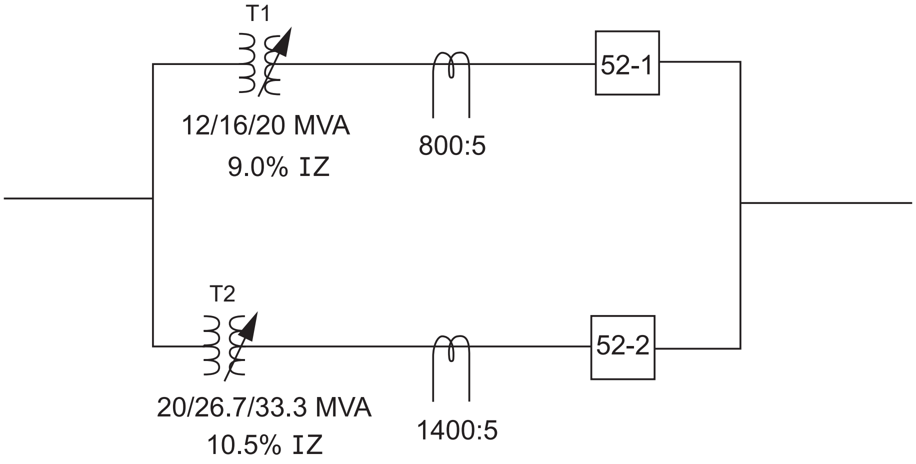

Figure D-10 Two Transformers of Unequal Rating, showing Installed CTs

If the CTs are used as is, the loading ratio is 1.75:1. As previously decribed, this loading ratio is not suitable for use. Instead, the T2 transformer CT should present an effective primary rating of the CT on T1 x 1.43:

CT primary T2 = 800 x 1.43 = 1144 A, or a ratio of 1144:5.0 A instead of 1400:5.

It is much more feasible to work at the secondary, by including an auxiliary CT rated 5.0:6.12 so that the overall ratio is 1400:6.12, equal to 1144:5.0.

With this simple addition, Figure D-10 evolves into Figure D-11 showing that T2 is effectively 1.43 times T1 in usable capacity.

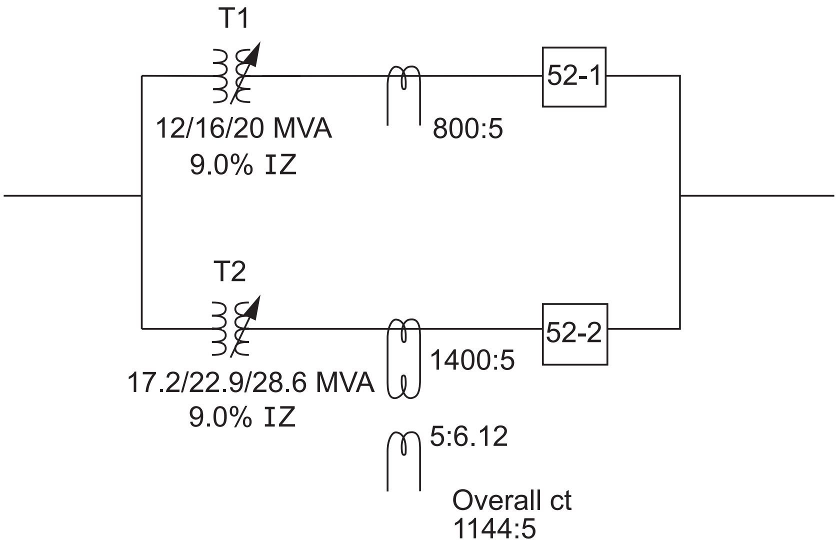

Figure D-11 Two Transformers Sized for Equal Per Unit Impedance

While this system will result in the transformers being loaded in the ratio of their usable capacity, it does not properly account for a circulating current due to unequal tap position. As illustrated in Figure D-11, a presumed 40 A circulating current results in different CT secondary current in T1 and T2. Figure D-12 portrays the condition, with the currents scaled down to 0.2 A. In this illustration, there is no load current, only 40 A of circulating current. Yet, 15% of the circulating current finds its return path through the 90 relay line drop compensation circuit, which would normally recognize only the load portion of the current. This is not a problem for installations where the objective is bus regulation, and LDC is set to zero.

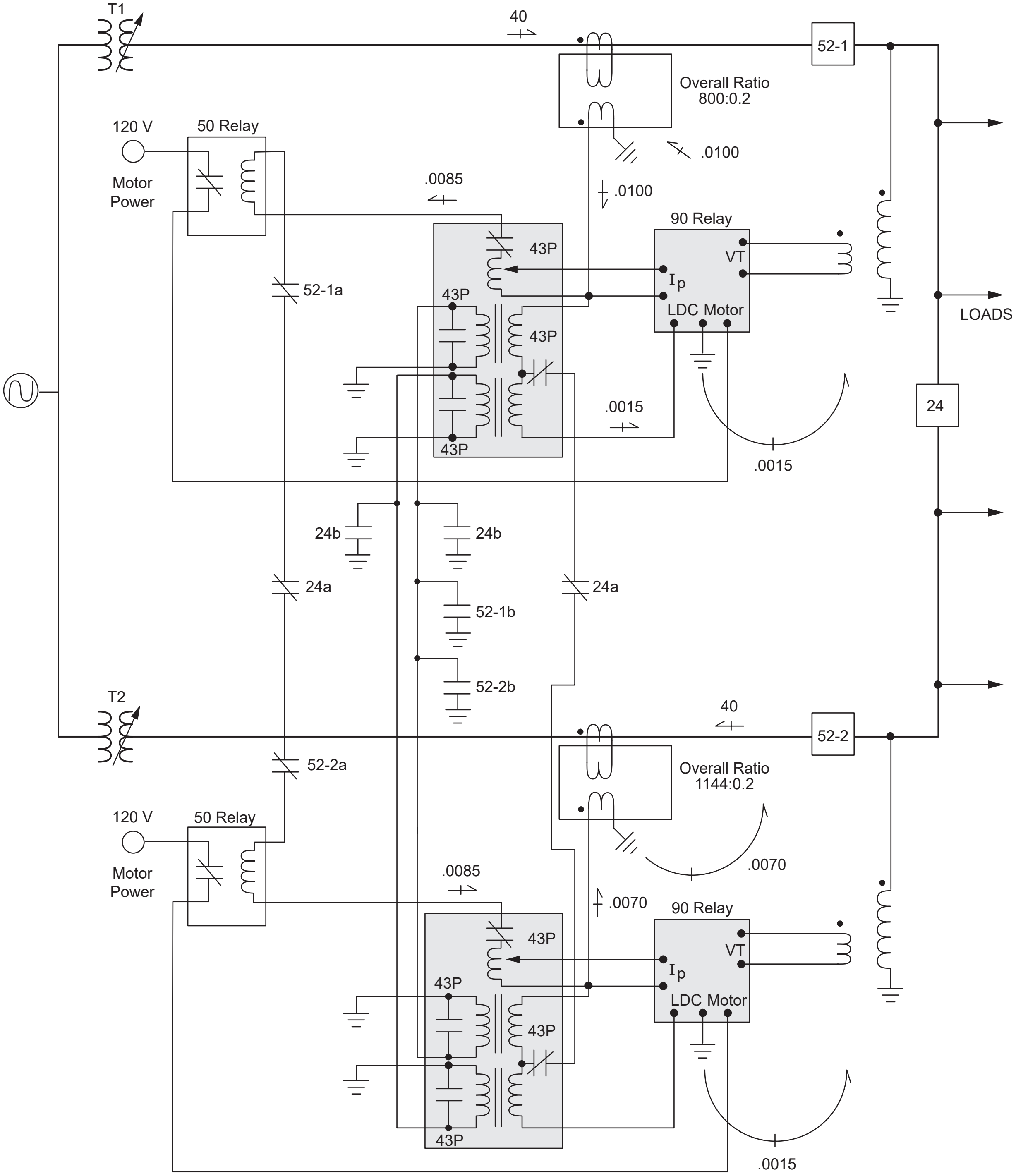

Figure D-12 Two Transformers with CTs Sized for Unequal Impedance, showing Path of Circulating Current

Paralleling Systems with an Intermediate Load Tap

There are instances where the system to be paralleled involves an intermediate load tap. This is illustrated in Figure D-13. In this instance, the upper path is transformers T11 and T12 in series, and in parallel with another transformer, T2. There is load taken from the bus between T11 and T12. The transformers are shown as impedances in Figure D-14.

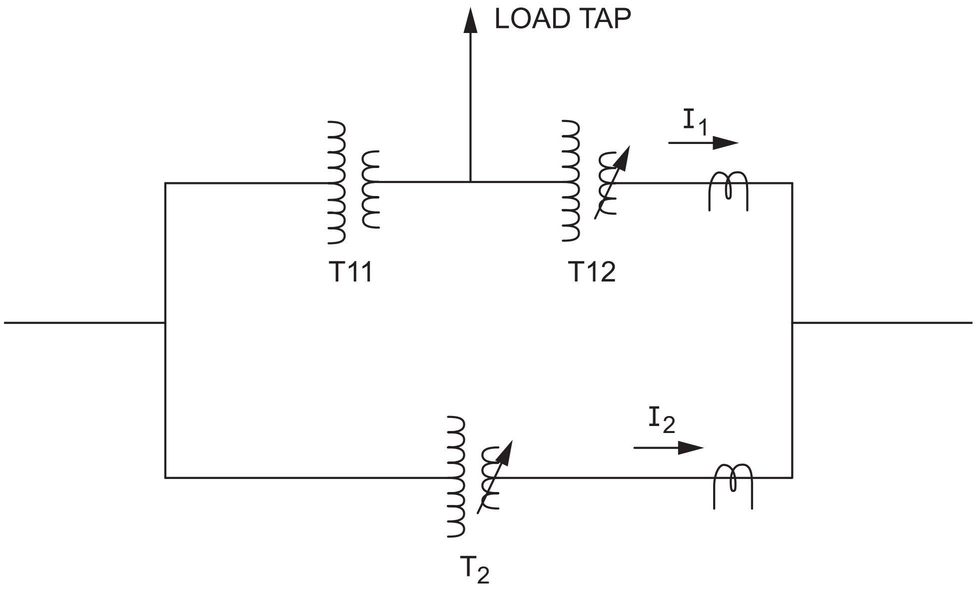

Figure D-13 Paralleling System with Intermediate Load Tap

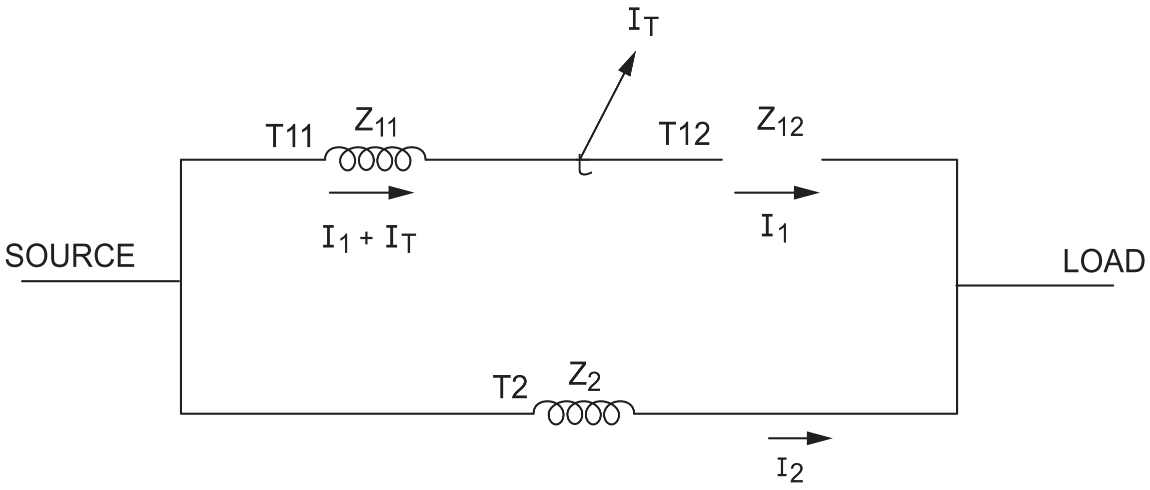

Figure D-14 Impedances Circuit of Paralleling System with Intermediate Load Tap

Where the voltage drop equations are:

$$V_{source} - Z_2 I_2 = V_{load}$$

$$V_{source} - [Z_{11}(I_1 + I_T) + Z_{12} I_1] = V_{load}$$

thus,

$$Z_2 I_2 = Z_{11}(I_1 + I_T) + Z_{12} I_1$$

I_T in T_{11} results in a voltage drop in the upper path which does not occur in the lower path. Note that because of this, if $I_1 = I_2$ then $Z_2 = Z_{11} + Z_{12}$ or, conversely, the parallel impedance paths must be different in order for the LTC load currents to be the same.

The effect of the $I_T Z_{11}$ drop is equivalent to an additional impedance in the Z_1 path, Z_{13} such that

$$Z_{11} I_T \text{—} Z_{13} I_1$$

Where Z_{13} is a fictitious impedance included to simulate the drop of $Z_{11}I_T$. Now, the circuit can be further simplified as illustrated in Figure D-15, where the upper path series impedance consists of the impedances of transformers T11 and T12 plus the new Z_{13}. The effective value of this new impedance for calculation is determined as:

$$Z_{11}\,(I_1+I_T) + Z_{12}I_1 = (Z_{11} + Z_{13} + Z_{12})\,I_1$$

$$(Z_{11} + Z_{12})I_1 + Z_{11}I_T = (Z_{11} + Z_{12})I_1 + Z_{13}I_1$$

$$Z_{11}I_T = Z_{13}I_1$$

$$Z_{13} = (I_T/I_1)Z_{11}$$

thus, Z_{13} varies with I_T and I_1, but is constant if the ratio I_T/I_1 is constant.

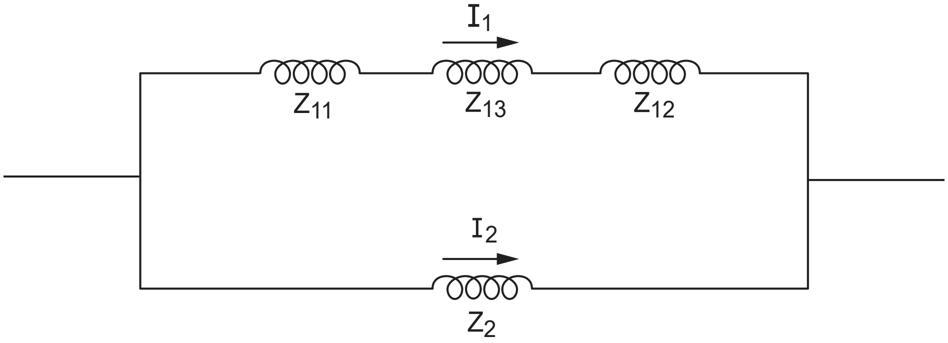

Figure D-15 Equivalent Impedance Circuit of Paralleling System with Intermediate Load Tap

For proper paralleling operation $Z_2 = Z_{11} + Z_{13} + Z_{12}$, namely, the impedance of T2 should be equal to:

$$Z_2 = Z_{11} + (I_T/I_1)\,Z_{11} + Z_{12}$$

$$Z_2 = (1 + I_T/I_1)\,Z_{11} + Z_{12}$$

for example: if $Z_{11} = 0.03$ pu, $Z_{12} = 0.08$ pu, and $I_T = ½\,I_1$, then with all impedances to the same base:

$$Z_2 = (1 + 0.5)\,0.03 + 0.08$$

$$Z_2 = 0.125 \text{ pu}$$

This procedure is correct only if the load ratio I_T/I_1 is constant. The procedure could also be applied to a system where I_T represents the load on an unregulated tertiary winding, if the equivalent circuit positive sequence impedances of the transformer primary, secondary, and tertiary windings are known.

D.3 Instrument Transformer Configuration

Many configurations are possible to connect Voltage Transformers (VTs) and Current Transformers (CTs) that serve as the input sources to the LTC control. The application under consideration involves different power transformer designs of different manufacture. Therefore, it is likely the instrument transformers are not configured identically on the two power transformers.

The VTs and CTs of the two transformers to be operated in parallel, are considered to be identical in configuration, if the output (secondaries) of both the VTs and CTs (as input to the LTC controls) are:

- of equal magnitude when the output voltage is the same, and the transformers are loaded to their effective rating for the installation
- of equivalent phasing

It is usually the case that the phase angle between the voltage and current signals will be zero degrees at forward power flow, unity power factor. If the phase angle is not zero degrees, the angle must be the same for both transformers in order to satisfy the requirements above.

Therefore, it is critical that the VT and CT phasing and magnitude values are identified for both transformers. If these values are not equivalent, at least one must be adjusted.

Three possible configuration schemes are illustrated in Figure D-16, shown with the accompanying phasor relationship. Each configuration produces a single phase input to the LTC control:

a. One VT, one CT on same phase
b. One VT connected line-line, two CTs on same phase as VT
c. One VT, two CTs on phases not used for VT

Several observations should be made from the resulting phasor diagrams:

- In every case, the voltage and current signals are in phase.
- In cases **a** and **c**, the VT secondary should be 120 V. In case **b**, the VT secondary should be 69 V so that the resultant phasor is 120 V.
- In case **a**, the CT secondary of 5.0 A will be input to the control. In cases **b** and **c**, the CT signal to the control will be √3 more than the individual CT secondaries. This value will be 8.66 A if the CT's are rated 5.0 A, which is common. An auxiliary CT is required to adjust the 8.66 A input to 5.0 A.

It should also be noted, that with only proper scaling being applied, a transformer using scheme "**a**" is compatible with another transformer using scheme "**c**" because both result in the equivalent phasing. However, scheme "**b**" is not to be used with "**a**" or "**c**" because of the inherent 30° phase shift between the signals of those configuration schemes.

a. One VT, one CT on same phase

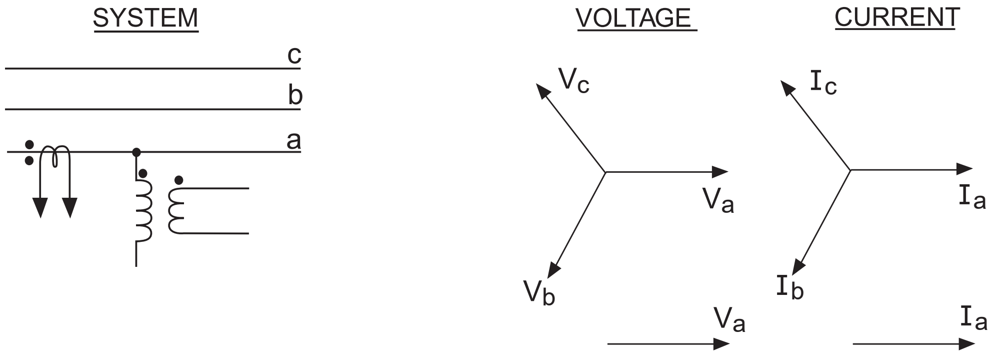

b. One VT connected line-line, two CT's on same phase as VT

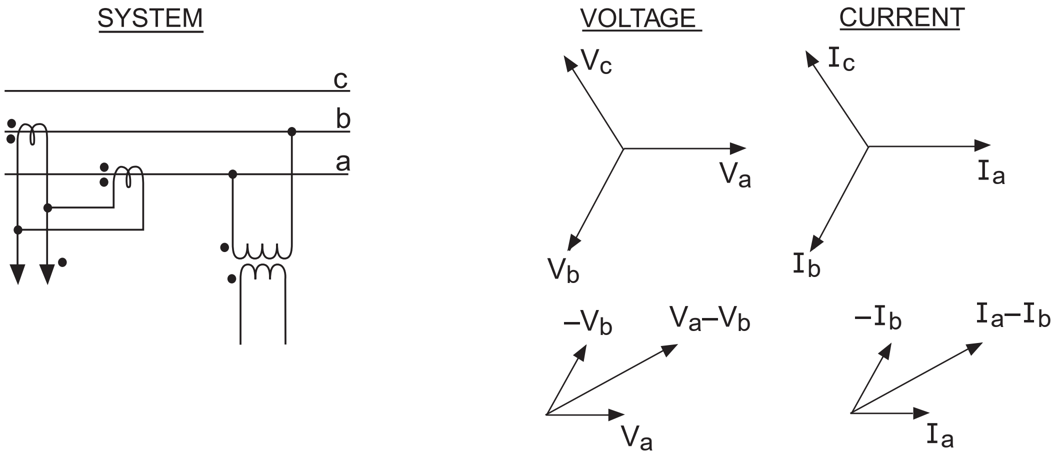

c. One VT, two CT's on phase not used for VT

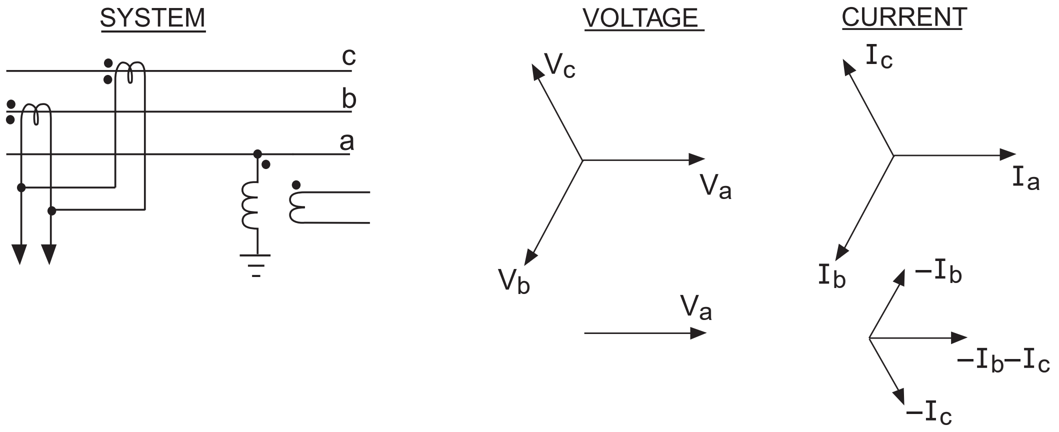

Figure D-16 Three Possible CT, VT Connection Schemes in LTC Transformer

E

Advanced Delta VAr Paralleling Methods

■ **NOTE:** REPLACES Beckwith Electric Application Note #24.

E.1 Overview

Appendix C *"Introduction to Circulating Current and Delta VAr1 Paralleling Methods"* builds a system and describes the operation for a basic application of two identical transformers operating in parallel. Appendix D *"Advanced Circulating Current Paralleling Method"* expands that definition to address installations that have more than two transformers or have mismatched transformers with different electrical characteristics (ratings or impedances).

This Appendix builds on those methods to include the following applications:

- System conditions in which the primary windings of the paralleled transformers might be fed from different source transmission lines
- There is a large variation in relative impedances of the paralleled transformers as tapchanges occur

These conditions can result in undesirable operations for paralleled transformers that use normal Circulating Current, Master/Follower, or Power Factor type paralleling methods. This Appendix will focus on these unique, but frequently encountered, conditions where paralleling equipment other than the Delta VAr Method could result in undesirable tapchanger operations.

The basic premise for LTC transformers operating in parallel is simple:

- The transformers must continue their basic function of controlling the load bus voltage as prescribed by the settings on the control.
- The transformers must act to minimize the current circulating between the transformers, as in the case of tapchangers operating on different tap positions.
- These functions must continue to operate correctly in multiple transformer applications regardless of station breaker operations and resultant station configuration changes.

E.2 Application

DEFINING THE PROBLEM

Master/Follower Paralleling – these methods assume that, under all system operating configurations, the desired objectives of the operation are met by maintaining the same physical tap position on all paralleled transformers. The operation consists of one active control commanding additional transformer's tapchangers to follow.

Circulating Current Paralleling – these methods assume that a continuous circulating current path is maintained for all system operating configurations and that any change in the circulating current magnitude is a result of an undesirable change in the relative tap positions of the paralleled transformers. Circulating current methods bias all paralleled controls to perform the next operation in the direction that will minimize the circulating current.

Power Factor Paralleling – these methods assume that the most desirable combination of tap positions on paralleled transformers is one that maintains equal power factors in the transformers. This method usually does not bias the controls to operate, but blocks the control from operating in the wrong direction based on the power factor. Note, it is difficult to apply power factor methods in substations with more than two transformers in parallel.

A substation configuration which can result in the system condition in which one of the paralleled transformers is fed from one transmission line, while the other is fed from a separate line, is illustrated in Figure E-1. Another configuration which can result in the same condition is that of ring bus configurations with both line positions and transformer positions. Operation under these configurations can violate the assumptions of each of the three paralleling methods described above.

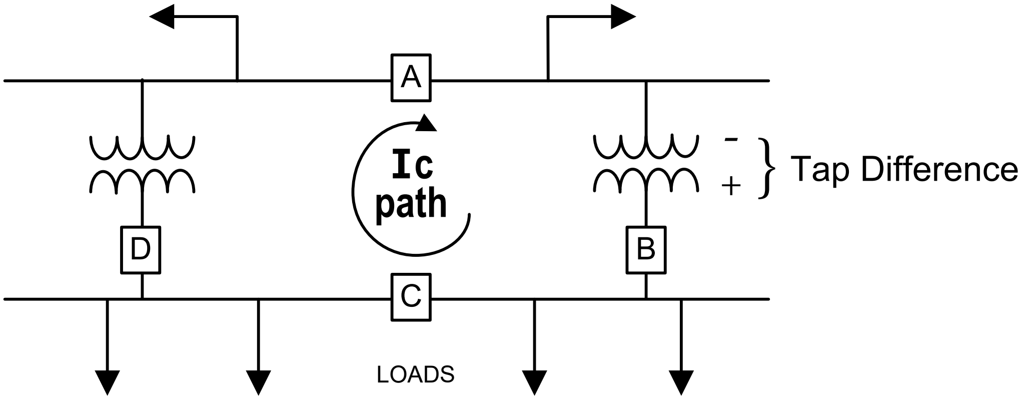

Figure E-1 Substation Breaker Configuration

Understanding the Conditions

1. A power transformer has a very high (25 to 50) X/R ratio. That is, power systems in general are reactive and the resistive effects of transformer impedances are negligible.
2. An in-phase voltage change (as in a tapchanger operation) applied to a reactive circuit (as in paralleled transformer configuration) only changes the circuit VAr flow and NOT the Watt flow.
3. Since tapchanges do not create changes in circulating KW flow, the KW flow must not be a factor in controlling the paralleled tapchangers. If system or equipment characteristics (other than tap mismatch) can substantially affect the KW flow through the transformers, VAr flow must be the only determining control quantity.
4. Transformers with directly-connected secondaries supplying the load, are in parallel regardless of the high-side connection configuration.

THE DELTA VAR METHODS

The theoretical basis for the Delta VAr method of paralleling is that paralleled transformers are meant to SHARE the VAr load (as well as the KW load) of the load bus. Since the KW sharing of the paralleled transformers is determined by the relative transformer impedances and NOT the tap position, KW flow should not be able to affect tap position choice. Further, the best choice of loading paralleled transformers is to maintain the VAr sharing, regardless of KW loading.

The Delta VAr method will result in the VAr flow to the substation load to be shared in the appropriate ratio by the paralleled transformers. It should be noted that matching auxiliary CT's are required in circulating current schemes when equally-sized transformers with different impedances are paralleled. Those auxiliary CT's are not necessary when the Delta VAr method is used.

The Delta VAr method is available in the M-2001 Series as an option, which internally calculates and compares the individual transformer VAr flows to make decisions for parallel biasing and operation. The Delta VAr method is implemented in the M-2001 Series in two options: Delta VAr1 and Delta VAr2. The difference is in the additional equipment required for implementation.

The **Delta VAr1** implementation uses the same auxiliary equipment as the circulating current method. Namely, a Parallel Balancing Module (which separates the load current from the circulating current), and an Overcurrent Relay (which gives independent backup protection to the paralleling operation). This makes Delta VAr1 directly replaceable in other controls using circulating current methods.

The **Delta VAr2** implementation is limited to use with no more than two transformers with both transformer currents input to both controls. This eliminates the need for the Parallel Balancing Module and removes the path for the installation of the Overcurrent Relay. With Delta VAr2, the sensitivity setting is added to the M-2001 Series, along with a circulating current overcurrent inhibit function. The Delta VAr2 option also provides a CT ratio matching setting, eliminating the need to match CT ratios for proper operation.

E.3 Operational Comparisons

Common High & Low Side Busses

As illustrated in Figure E-1, all breakers (A through D) are closed. All considerations previously examined in Appendix C and D are applicable. Changes in circulating current are a function of mismatched tap position operations. Problems can occur if impedance changes in one transformer are substantially different from the impedance changes in the other, as tapchanges occur. The problem is that the KW loading is changing, as reflected in the circulating current, and therefore could be a factor in tap positioning – except if using the Delta VAr method.

Paralleling Interrupted

Referring to Figure E-1, breakers B ,C or D operate singly or in combination to isolate one transformer from the other. Any paralleling method uses "a" or "b" contacts from the breakers to determine this condition and operate appropriately.

Source Side Separation

Referring to Figure E-1, Breaker A opens, which separates the sources to the paralleled transformers. Although contacts could also indicate this condition, there is no operating procedure using the standard methods of paralleling to account for this circumstance.

Before the breaker operation, either KW, or VArs, or both could have been flowing from one portion of the transmission system to the other through these lines (or more load was being supplied by one line than the other). When Breaker A opens, the voltages on both lines will reflect the preceding condition by either being at different voltage levels (VAr flow) or different phase angles (KW flow). That is, that flow will attempt to continue through the transformers, though more limited by the additional transformer impedance inserted into the circuit.

Recognizing that tapchanges (in-line voltage change) will not materially affect KW flow in a reactive circuit, and that a solution which best equalizes the loading of the paralleled transformers is desirable, the responses of the different paralleling methods to this condition are as follows:

Master/Follower Paralleling Method:

No response for corrective action. After the response to a changed load bus voltage, the intersystem flow would be added to one transformer load and subtracted from the other. Since this difference could be substantial, this method is unacceptable for most systems.

Circulating Current Paralleling Method:

- If the intersystem flow was VArs, the circulating current method would bias the operation of the tapchangers to attempt to offset the flow. This would result in operation at different tap positions for the two transformers and proper sharing of the load from the two sources. That is, the tap difference would equal the voltage level difference, thus stopping the flow-thru VArs. This is satisfactory operation.
- If the intersystem flow was KW, the circulating current method would again bias the operation of the tapchangers to attempt to offset the flow. However, the KW flow cannot be corrected with tapchanger operations. The result is unpredictable, and certainly not satisfactory.
- If the intersystem flow was a combination of VArs and KW, the circulating current method would again bias the operation of the tapchangers to attempt to offset the flow. This results in the same unsatisfactory operation, as noted above.

Power Factor Paralleling Method:

- If the intersystem flow was VArs, the power factor method would block the operation of the appropriate tapchanger to attempt to minimize the difference in power factor. This would result in operation at different tap positions for the transformers, which would cause equal VAr flow in the transformers. This is satisfactory operation, even though it may take longer to get to the final tap positions, because of the blocking action mentioned earlier.
- If the intersystem flow was KW, the power factor method would block the operation of the appropriate tapchanger to attempt to minimize the difference in power factor. This would result in operation at different tap positions for the transformers, which would cause unequal VAr flow in the transformers. The result is that the transformer with the highest KW load will now be forced to also have the highest VAr loading.
- If the intersystem flow was a combination of VArs and KW, the power factor method would operate in the same manner as the KW condition described above.

Delta VAr Paralleling Method:

Since the Delta VAr method ignores all KW flows, it has only one purpose under all system conditions. That purpose is to result in the VAr flow to the substation load to be shared in the appropriate ratio by the paralleled transformers. This "appropriate ratio" is determined by the choice of the current transformer ratios used to correctly parallel transformers of different size.

To Summarize:

- A tap difference causes a circulating current (I_C)
- The I_C is able to be calculated from the tap step voltage and transformer impedance
- In reference to Figure E-1, if:

  C open = Independent Operation – LDC OK
  B or D open = Independent Operation – Correction Needed
  A open = Parallel Operation – Separate Sources (**Delta VAr REQUIRED**)

- The I_C is mostly VArs, since transformer impedances are mostly reactance

■ **NOTE:** The KW flows are NOT effectively controlled by tap position, but rather by relative impedance or phase-shifting transformers.

This Page Left Intentionally Blank

F Basic Considerations for the Application of LTC Transformers and Associated Controls

■ **NOTE:** REPLACES Beckwith Electric Application Note #17.

F.1 Overview

This Appendix provides an overview of the fundamental topics related to the theory of voltage regulation, control equipment commonly used in conjunction with load tapchanging (LTC) transformers and step-voltage regulators, and criteria for establishing the proper settings for this equipment.

LTC Transformers and/or Step-Voltage Regulators are used extensively throughout the utility and industrial complex. Their application has become so routine, that there may be a loss of recognition of some of the basic principles which apply. A review of those basic principles of operation are re-examined in this Appendix. With this material, the user can expect to be able to setup LTC system equipment with a high level of confidence in its proper operation.

Considerations

Power systems which include tapchanging under load transformers will vary significantly in their degree of complexity. This Appendix is structured starting with the most fundamental considerations, and builds, step-by-step, into more involved applications. It should also be recognized that there are many individual, specialized applications, which must be thoroughly examined on an case-by-case basis, and are beyond the scope of this Appendix.

F.2 Voltage Regulation Principles

Step-voltage regulation is most commonly accomplished using LTC transformers or regulators which provide for the output (secondary) voltage to be regulated at about the range of 90% to 110% of the voltage at the input (primary). This regulation is accomplished in 32 discrete steps, so that each step represents:

$$\frac{\text{20\% voltage total range of regulation}}{\text{32 steps}} = \text{0.625\% voltage / step}$$

$$\text{or } \frac{5}{8} \text{ \% voltage per step}$$

Since all modern controls sense the output of a 120 Vac potential device, a one-step change of the LTC, results in a voltage change of 0.75 V at the control potential input.

This mode of voltage regulation is commonly referred to as **bus** or **feeder** regulation, being indicative or aspects of the system for which the regulation is oriented.

- **Bus Regulation –** A single bus voltage is regulated by an LTC transformer, three-phase step-voltage regulator, or three single phase step-voltage regulators. The objective is to regulate the voltage of the substation low voltage bus, assuming this will satisfy the voltage requirements of all feeders fed from the regulated bus. There will commonly be several (perhaps four or more) three-phase distribution feeders emanating from the regulated bus.
- **Feeder Regulation –** Each feeder is separately regulated by single phase step-voltage regulators out on the distribution feeders or in the substation.
- **Combination –** Combinations of **bus** and **feeder** regulation may be used if feeders are long.

The overall circuit may take the form of Figure F-1 or Figure F-1(A), or a combination of the two.

Figure F-1 illustrates a system that includes a power source, a transmission system represented by its impedance Z, and a substation with any of three means of providing voltage regulation at the bus (to hold V_B steady). Figure F-1(A) shows a non-LTC transformer with four distribution feeders, each with distributed loads, which employ single phase step-voltage regulators.

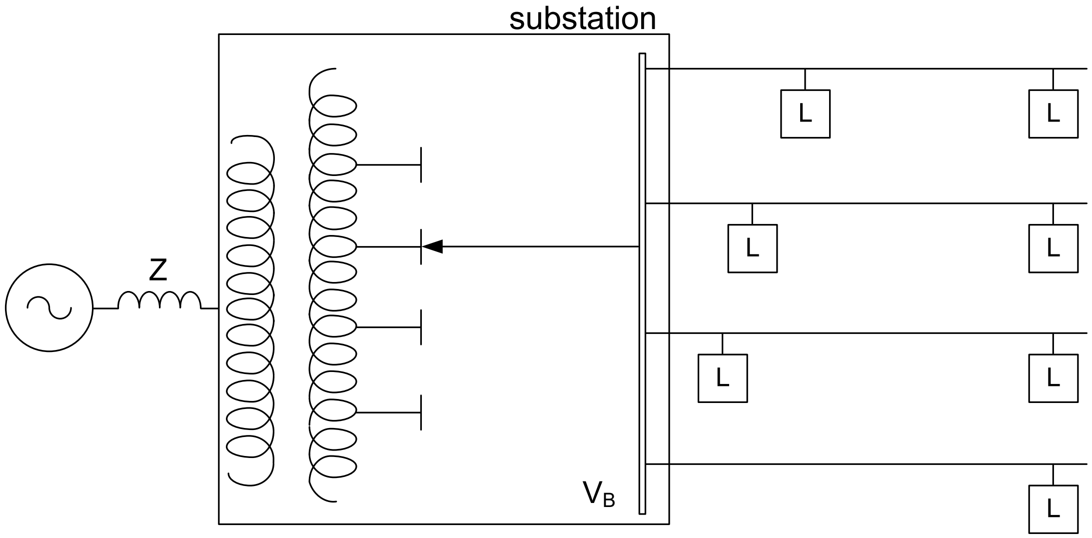

3Φ LTC Transformer
-OR-
Non LTC Transformer and 3Φ Regulator
-OR-
Non LTC Transformer and 3 – 1Φ Regulators

Distribution
Feeders

Figure F-1 *Typical System One-Line Diagram – Bus Regulation*

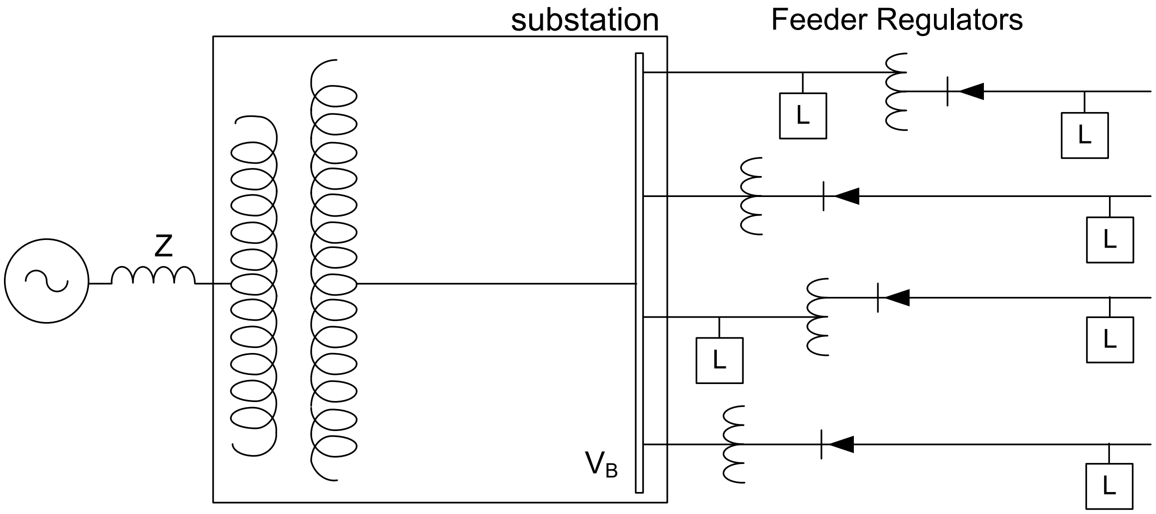

Non- LTC
Transformer

1Φ Regulators on
Distribution Feeders

Figure F-1(A) *Typical System One-Line Diagram – Feeder Regulation*

Factors Which Cause V_B to Change

An examination of Figure F-1 reveals that there are four simple factors which when changed, will cause the voltage at the substation secondary bus to change.

1. Transmission system voltage
2. Impedance (R and X) looking back from the bus
3. Load and load power factor on distribution feeders
4. The tap position of the LTC transformer/regulator(s) for bus regulation case

Because each of the first three factors is continually changing, by virtue of conditions beyond the scope of this Appendix, the LTC will be used to mitigate the combined effect of the first three factors.

OBJECTIVE #1: HOLD THE BUS VOLTAGE (V_B) AT THE DESIRED LEVEL

The most fundamental objective for implementation on the LTC regulating the bus, is simply to hold the voltage on the bus at the desired level. In order to accomplish this objective, there is only one system parameter which must be known to the control: the present value of V_B. This requires that a voltage transformer (VT) be added to the circuit in order to convert the bus voltage to a 120 Vac basis for use by the control.

The circuit in Figure F-2 illustrates the important aspects of the system: a VT and a control have been added to the system illustrated in Figure F-1. The control allows for the operator to enter the three settings generally considered to be the minimum realistic setpoint requirements: Voltage Level, Bandwidth, and Time Delay.

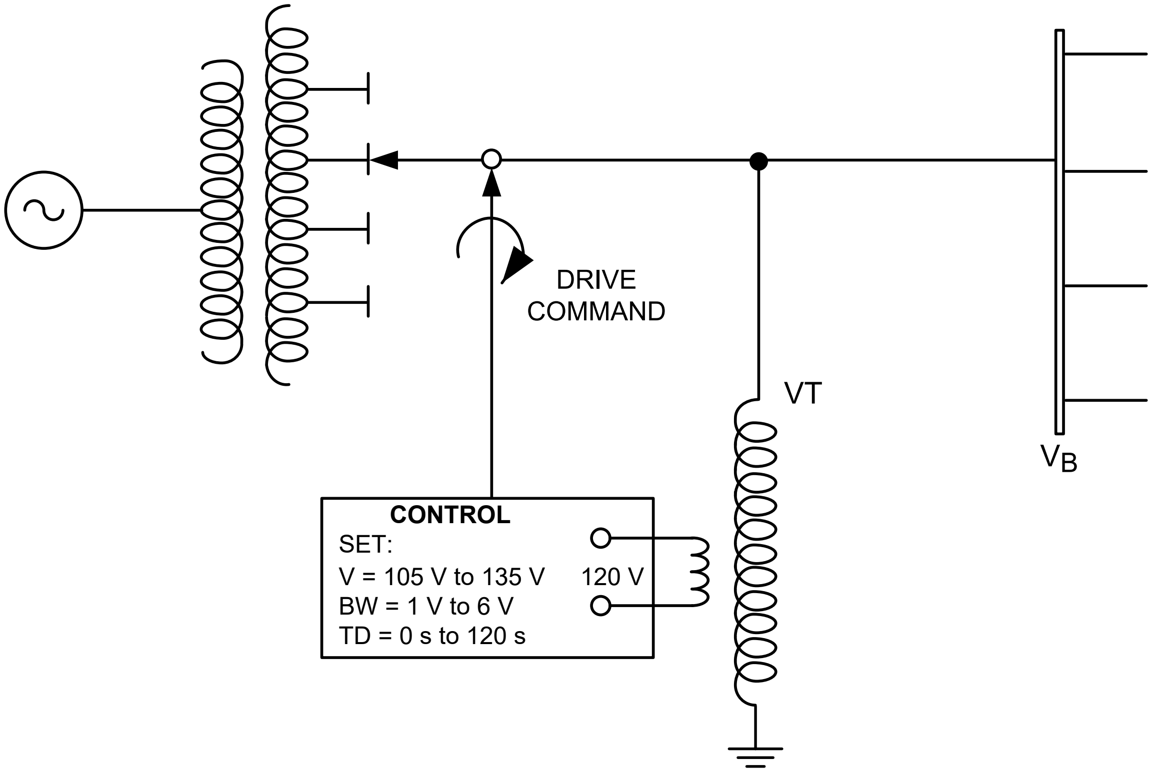

Figure F-2 Control Circuit Required to Satisfy Objective #1

Voltage Level

This is the desired Voltage Level at the Bus. This is related in terms of the 120 V basis of the control. The setting used will generally be higher than 120 V (for example 124 V to 126 V) in recognition that there will be a voltage drop along the distribution feeders and a common criterion is to hold 114 V to 126 V at all loads. Controls typically allow for settings as low as 105 V due to the use in the past of reference voltages of 110 V and 115 V, from what are now obsolete standards.

Voltage Bandwidth

Due to the step change nature of the LTC output, there must be a range of voltage surrounding the voltage level setting, which is acceptable to the control and will be recognized by the control as being "in-band." Thus, the bandwidth also expressed in volts on the 120 V base is the total voltage range, one-half of which is allowed above, and one-half below the voltage level setting*. There is always a minimum acceptable bandwidth setting, usually considered to be twice the voltage change per LTC step change, or 1.5 V in the common system. In fact, 2.0 and 2.5 V are the most common settings, with 3.0 V and higher values used where tight regulation is not required.

■ **NOTE:** *This is not universally true. In some countries the bandwidth is regarded as the voltage on each side of the centerband, resulting in a number double the acceptable band.

Time Delay

An intentional time delay is always included, to avoid tapchanger operations when the voltage excursion outside of the bandwidth is of short duration. For example, when a large motor starts on the system, the voltage level may be pulled low, but is expected to recover in 15 seconds. To initiate a raise tapchange for this short period does not significantly help in motor starting, and also requires consecutive lower tapchange operations, once the motor comes to speed. This results in accelerated wear of the tapchanger. Consequently, the intentional time delay is used, generally set in the range of 30 to 60 seconds.

Interaction of the Three Basic Control Settings

Figure F-3 illustrates the relationship between the voltage level **V** (also referred to as voltage bandcenter), the bandwidth **BW** (illustrated as 1/2 BW to each side of the bandcenter), and the time delay **TD**. As shown in Figure F-3, the bus voltage V_B is sagging with time, due to an increase in the system load. At some point, the voltage drops below V – 0.5 BW, initiating the timer. When the time exceeds the set value, a drive command is sent to the tapchanger. Tapchanger operation results in a step-change of the voltage V_B, bringing it back "in-band", thereby satisfying Objective #1, to hold the bus voltage at the desired level.

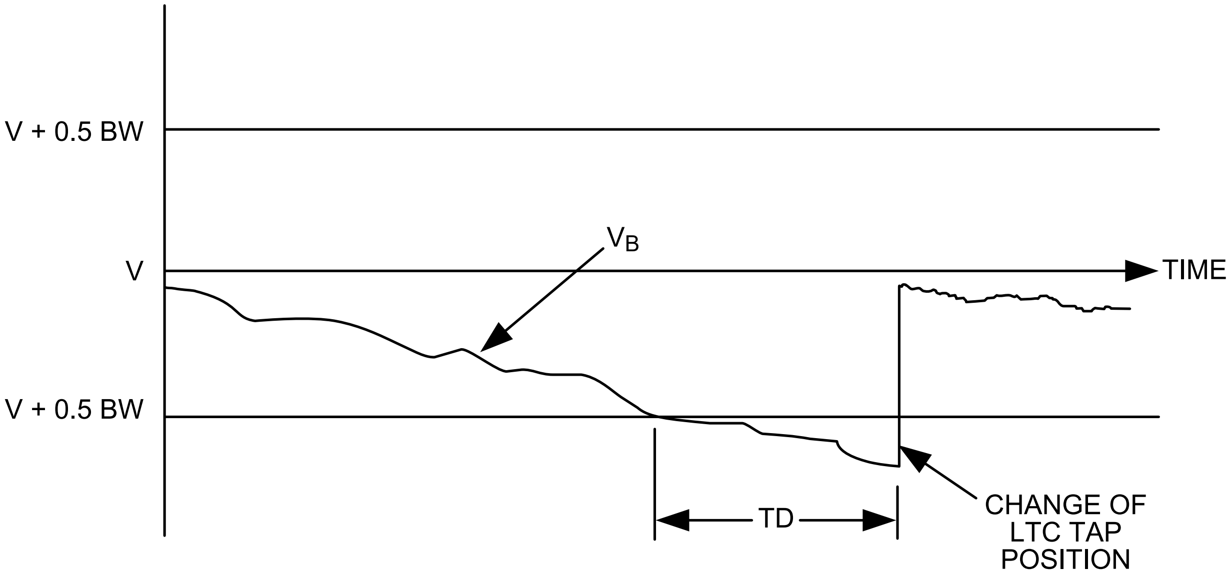

V = Voltage Setpoint of tapchanger control

Figure F-3 Interaction of the Three Basic Control Settings

OBJECTIVE #2: HOLD THE LOAD VOLTAGE (V_L) AT THE DESIRED LEVEL

The real objective should be to hold the voltage at the load to a desired level. To accomplish this, controls include a provision to set Line Drop Compensation (LDC). This provides the control with the additional feature of modeling the impedance of the distribution feeder between the LTC and the load, to compensate for the voltage drop of the feeder.

The difficulty is that there is seldom a clear, real-world illustration of a system suitable to the classic application of LDC: one in which there is appreciable length of distribution feeder terminated in the sole load for that feeder.

Despite this, LDC is frequently used with the recognition that the system may not be ideally suited for it. Therefore, it is important to understand the underlying principle.

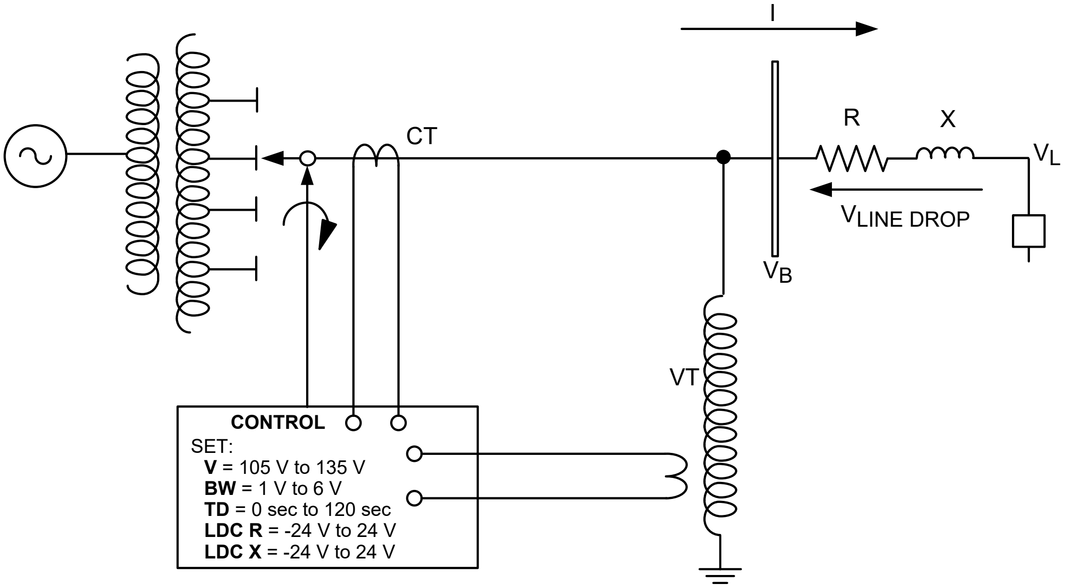

SET:
V = 105 V to 135 V
BW = 1 V to 6 V
TD = 0 sec to 120 sec
LDC R = -24 V to 24 V
LDC X = -24 V to 24 V

Figure F-4 Control Circuit Required to Satisfy Objective #2

The system for examination is illustrated in Figure F-4. In this case, it is the voltage at the load **V**$_L$, which is to be regulated, rather than V_B. Lacking a means of remote communications, the control has no way to directly know V_L. However, as seen in Figure F-4, three values allow the control to model (or calculate) V_L.

1. The bus voltage V_B
2. The feeder current I
3. The feeder resistance R and reactance X

Therefore, with knowledge of the three values above, the control can be programmed to adjust the bus voltage (V_B) to compensate for the voltage drop in the feeder line between the bus and the load. As illustrated in Figure F-5, when proper phasor relationships are considered, it is evident that:

$$\vec{V}_L = \vec{V}_B - \vec{V}_{LINE\ DROP}$$

$$\vec{V}_L = \vec{V}_B - \vec{I}\,(R + jX)$$

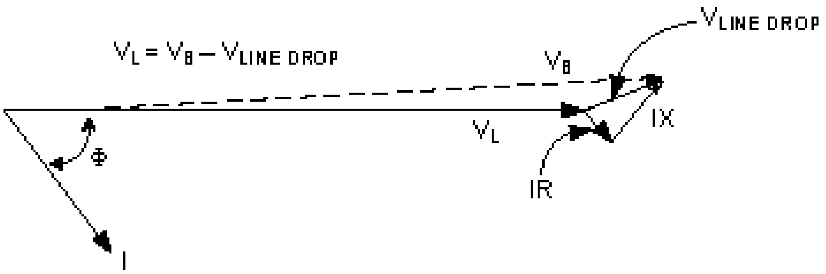

Figure F-5 Phasor Relationships Applying to Voltage Regulation Using Line Drop Compensation

In Figure F-5, it is important to note that V_B and V_L will not usually be in phase with each other, the phasing being a function of the relative magnitudes of R and X and the magnitude and power factor angle (Φ) of the load current. Therefore, it is evident that the control must resolve these parameters and accomplish the solution as indicated by the previous equations.

To establish proper control settings, the following must be considered:

1. Desired voltage level ***at the load***: the desired voltage level at the load will typically be about 120 V. It is this value which is to be set on the control.
2. Bandwidth – as described in Objective #1.
3. Time Delay – as described in Objective #1.
4. Line Drop Compensation – LDC is set using individual R and X values. These values are calibrated on the control in volts (not ohms), where the setting is representative of the line drop in volts on a 120 V base, when the Line is carrying the rated primary current of the CT. Most controls accommodate -24 V to +24 V setpoint ranges for LDC R and LDC X (the use of negative R and X settings will be addressed later).

F.3 Setting LTC Control LDC R and LDC X

As previously stated, the control must "know" the values of Resistive and Reactive Voltage Drop applicable to Line Drop Compensation. This requires knowledge of the distribution feeder configuration. To calculate the R and X values use the following procedure:

1. Determine the Equivalent Conductor Spacing "**D**". Regardless of the physical orientation of the phase conductors, a distance **D** is calculated as:

$$D = \sqrt[3]{D_{AB} \times D_{BC} \times D_{CA}}$$

where D_{AB}, D_{BC} and D_{CA} represent the spacings, in inches, between phase conductors.

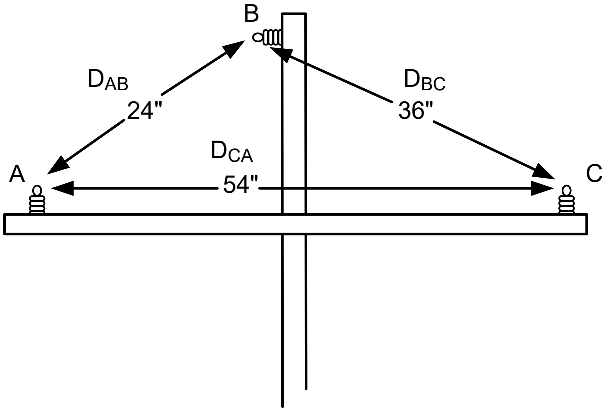

Figure F-6 Example Distribution Feeder Orientation

For the example shown: $D = \sqrt[3]{24 \times 36 \times 54} \cong 36 \text{ inches}$

2. Using the size and material of the phase conductors in the system, and the distance (**D**), obtain the feeder resistance **R**, and inductive reactance **X** (ohms per conductor per mile), from the applicable Table F-1 or Table F-2.

For example, if the conductor is 266 MCM ACSR; then, as indicated in Table 1 with **D** = 36 inches:

r = 0.385 ohms/conductor/mile

x = 0.598 ohms/conductor/mile

■ **NOTE:** Because these values are in ohms per conductor per mile, the values of **r** and **x** must be increased for circuits other than three-phase wye.

- If the circuit is delta connected, multiply **r** and **x** by 1.73
- If the circuit is single phase, multiply **r** and **x** by 2.0

3. The values above are calculated for one mile of feeder length. Multiply these values by the length of the feeder, in miles, for the total line resistance and reactance.

   Example: if the circuit is connected in wye, and the length is 1.1 miles:

   Z = 1.1 (r + jx) = 1.1 (0.385 + j0.598)

   = 0.424 + j0.658 ohms

4. Calculate, individually, the per unit resistive and reactive voltage drops on the feeder using the CT primary rating and the system voltage as base.

   Example: if the CT is monitoring one phase and is rated 600 A primary. The circuit voltage is 13.8 kV.

$$Z_{\text{base}} = \frac{13{,}800/\sqrt{3}}{600} = 13.3 \text{ ohms}$$

$$IR_{\text{pu}} = \frac{r}{Z_{\text{base}}} = \frac{0.424}{13.3} = 0.032 \text{ pu}$$

$$IX_{\text{pu}} = \frac{x}{Z_{\text{base}}} = \frac{0.658}{13.3} = 0.050 \text{ pu}$$

5. The control operates on a 120 Vac base, therefore:

   R_{set} = 0.032 x 120 = 3.8 V (or 4 volts)

   X_{set} = 0.050 x 120 = 5.9 V (or 6 volts)

ALUMINUM CONDUCTOR – STEEL REINFORCED									
Conductor Size	Resistance at 50° C	60 Hz Reactance (Ohms per conductor per mile at equivalent "D")							
MCM		18"	24"	30"	36"	42"	48"	54"	60"
1272.0	0.0851	.421	.456	.483	.505	.524	.540	.555	.567
954.0	0.1128	.439	.474	.501	.523	.542	.553	.573	.585
795.0	0.1373	.450	.485	.512	.534	.553	.569	.584	.596
556.5	0.1859	.469	.504	.531	.553	.572	.588	.603	.615
477.0	0.216	.479	.514	.541	.563	.582	.598	.613	.625
397.5	0.259	.490	.525	.555	.574	593	.609	.624	.636
336A	0.306	.500	.535	.562	.584	.603	.619	.634	.646
266.8	0.385	.514	.549	.576	.598	.617	.633	.648	.660
AWG									
4/0	0.592	.630	.665	.692	.714	.733	.749	.764	.776
3/0	0.723	.670	.705	.732	.754	.773	.789	.804	.816
2/0	0.895	.690	.725	.752	.774	.793	.809	.824	.836
1/0	1.12	.705	.740	.767	.789	.808	.824	.839	.851
2	1.65	.691	.726	.753	.775	.794	.810	.825	.837
4	2.57	.708	.743	.770	.792	.811	.827	.842	.854
6	3.98	.722	.757	.784	.806	.825	.841	.856	.868

Table F-1 Distribution Feeder Resistance and Reactance for Aluminum Conductor – Steel Reinforced

COPPER – HARD DRAWN									
Conductor Size	Resistance at 50° C	60 Hz Reactance (Ohms per conductor per mile at equivalent "D")							
MCM		18"	24"	30"	36"	42"	48"	54"	60"
1000	0.0685	.449	.484	.511	.533	.552	.568	.583	.595
750	0.0888	.466	.501	.529	.550	.569	.585	.600	.612
600	0.1095	.481	.516	.543	.565	.584	.600	.615	.627
500	0.1303	.492	.527	.554	.576	.595	611	.626	.638
400	0.1619	.507	.542	.569	.591	.610	.626	.641	.653
350	0.1845	.515	.550	.577	.599	.618	.634	.649	.661
300	0.215	.525	.560	.587	.609	.628	.644	.659	.671
250	0.257	.536	.571	.598	.620	.639	.655	.670	.682
AWG									
4/0	.0303	.546	.581	.608	.630	.649	.665	.680	.692
3/0	0.382	.554	.589	.616	.638	.657	.673	.688	.700
2/0	0.481	.581	.616	.643	.665	.684	.700	715	.727
1/0	0.607	.595	.630	.657	.679	.698	.714	.729	.741
1	0.757	.609	.644	.671	.693	.712	.728	.743	.755
2	0.964	.623	.658	.685	.707	.726	.742	.757	.769
4	1.518	.648	.683	.710	.7.32	.751	.767	.782	.794
6	2.41	.677	.712	.739	.761	.780	.796	.811	.823
8	3.80	.714	.749	.776	.798	.817	.833	.848	.860

Table F-2 Distribution Feeder Resistance and Reactance for Hard Drawn Copper Conductor

Adjustment for Voltage/Current Phasing Errors in Single Phase Step-Voltage Regulators Connected in Delta Systems

The calculations presented so far, presume that the signals from the VT and CT are in-phase at unity power factor. This can always be accomplished with proper instrument transformer connections on three-phase transformers and regulators, and will hold on single phase step-voltage regulators connected in wye, or in single phase applications. However, this will not be true for single-phase step-voltage regulators which are connected in delta, where the current signal will lead or lag the voltage signal by 30° at unity power factor of the load.

■ **NOTE:** The current signals (relative to the voltage) will be shifted either 30° leading or 30° lagging (but all the same) for each regulator in a three-phase delta bank. For an open delta connection, one regulator will be leading and the other will be lagging. The instruction manuals for the regulators contain procedures to determine the leading and lagging units.

If there is no provision to automatically account for this shift in the control, the necessary corrections to the R and X LDC setpoints can be made using the following guidelines:

- For a "lagging" regulator, where the CT signal lags the VT signal by 30°

  $R_{set\ new} = 0.866\ R_{set} - 0.5\ X_{set}$

  $X_{set\ new} = 0.866\ X_{set} + 0.5\ R_{set}$

- For a "leading" regulator, where the CT signal leads the VT signal by 30°

  $R_{set\ new} = 0.866\ R_{set} + 0.5\ X_{set}$

  $X_{set\ new} = -0.5\ R_{set} + 0.866\ X_{set}$

  where R_{set} and X_{set} are the values calculated in Step 5 (above), and $R_{set\ new}$ and $X_{set\ new}$ are the values to be used on the controls.

Thus, for the example of a **lagging** regulator:

$R_{set\ new} = 0.866\ R_{set} - 0.5\ X_{set}$

$= 0.866\ (3.8) - 0.5\ (5.9)$

$= 0.3$ (or 0 V)

$X_{set\ new} = 0.5\ R_{set} + 0.866\ X_{set}$

$= 0.5\ (3.8) + 0.866\ (5.9)$

$= 7.0$ (or 7 V)

It is because of this situation, that a negative R or X value may be needed to set the Line Drop Compensation.

Bus Voltage Conditions When Using Line Drop Compensation

As stated, the Line Drop Compensation feature will hold a desired voltage at the load. It accomplishes this by recognizing that there will be a voltage drop between the bus and the load (Figure F-5), and consequently will cause the voltage V_B to increase above that of V_L according to the following:

$$\vec{V}_B = \vec{V}_L - \vec{V}_{\text{LINE DROP}}$$

The following three examples illustrate the situation as the load current varies:

Example 1:

V_L desired = 120 V

I_L = 600 A = 1.0 pu, the CT primary rating

Φ = load power factor angle = $\cos^{-l}$ pf

pf = 0.8, Φ = 37°

R_{set} = 4 V

X_{set} = 6 V

$$\vec{V}_B = \vec{V}_L + \vec{V}_{\text{LINE DROP}}$$
$$\vec{V}_B = \vec{V}_L + I[R(\cos\Phi - j\sin\Phi) + X(\sin\Phi + j\cos\Phi)]$$
$$\vec{V}_B = (120 + j0) + 1.0[4(0.8 - j0.6) + 6(0.6 + j0.8)]$$
$$\vec{V}_B = 120 + 6.8 + j2.4 = 126.8 + j2.4$$
$$|V_B| = 126.82 \text{ volts}$$

Example 2:

Same as Example 1, except I = 0.5 pu

$$|V_B| = 123.41 \text{ volts}$$

Example 3:

Same as Example 1, except I = 1.5 pu

$$|V_B| = 130.25 \text{ volts}$$

From this it should be clear that an inadvertent overload may cause the bus voltage to go too high if line drop compensation is used without a voltage limit override (see "Voltage Limit Override" on page F–13).

Comparison Voltage Profile, Non-LDC vs LDC

The following two figures, show the voltage profile of a line, to illustrate the benefit of use of Line Drop Compensation. In Figure F-7 the voltage at the load is heavily influenced by the magnitude of the load current. For example, the voltage level setting has been established as 124 V at the substation bus, in order to have 120 V at the load during periods of heavy line loading. For this to be true, the load voltage is seen to be only slightly less than 124 V during light load conditions.

Figure F-7(A) illustrates the benefit of using LDC. Here, with the voltage level setpoint established at 120 V, that voltage is held at the load, regardless of the magnitude of the load. Clearly, this is accomplished by causing the bus voltage to vary from slightly over 120 V to 124 V as the load increases.

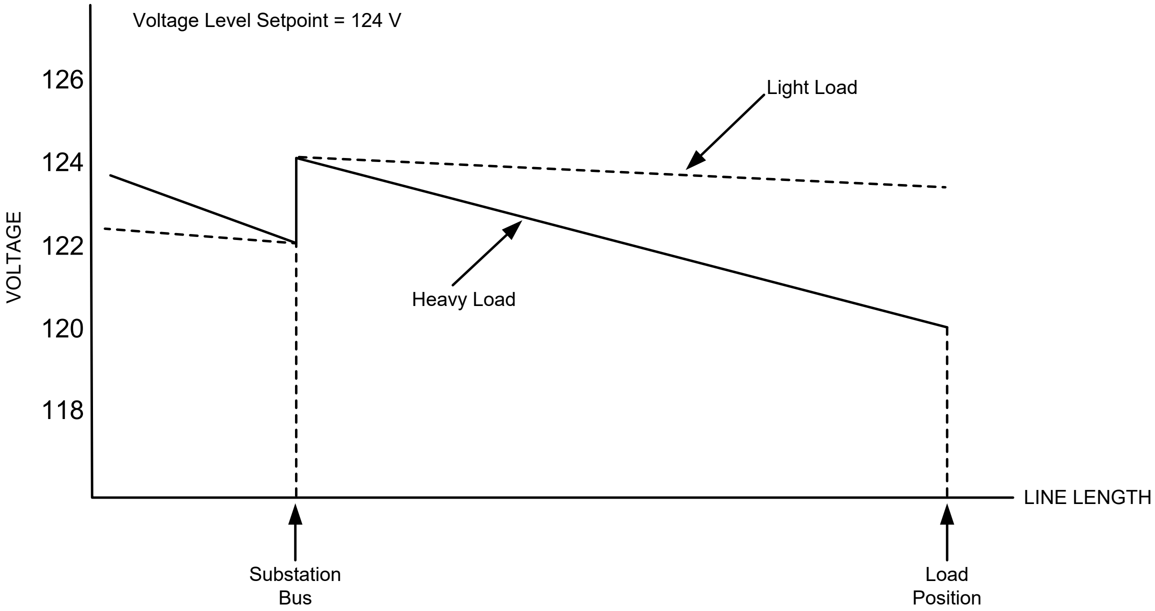

Figure F-7 System Voltage Profile, Not Using Line Drop Compensation

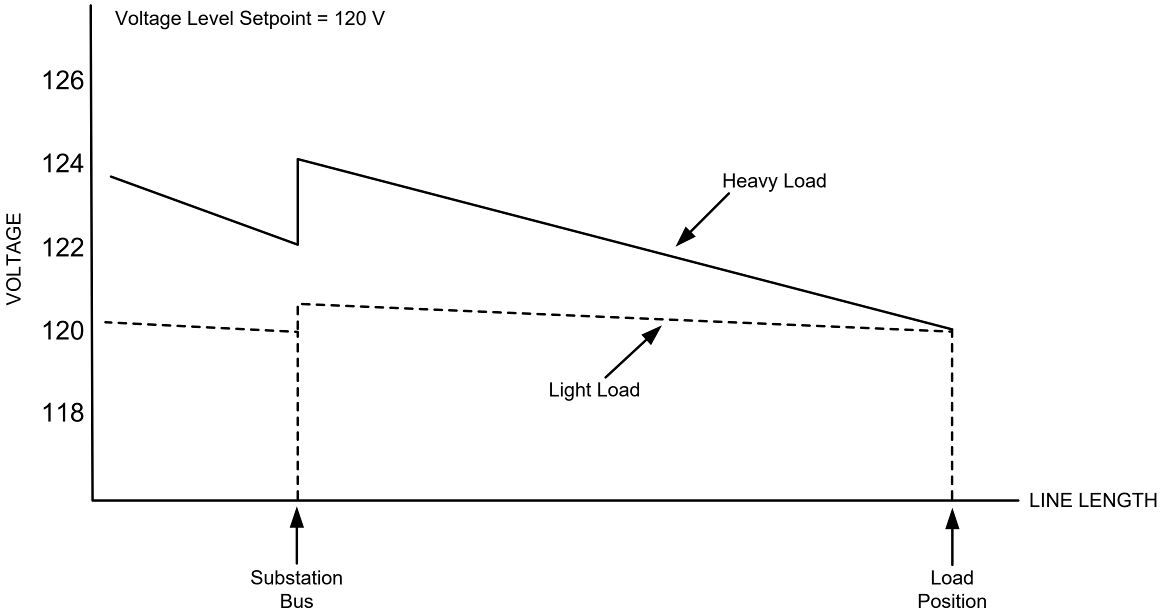

Figure F-7(A) System Voltage Profile, Using Line Drop Compensation

Voltage Limit Override

As illustrated, the use of Line Drop Compensation may cause the substation bus voltage to go too high if the load increases higher than anticipated, or if no provision is made to limit the magnitude of the bus voltage V_B.

The appropriate solution is to add an LTC Backup Control. This control, which for reliability considerations should be independent of the main control panel, is expected to recognize the voltage V_B and act to limit that voltage to a safe level. At high load current magnitudes, this is accomplished by effectively limiting the LDC contribution above the current, which results in V_B being higher than desired.

The Backup Control is connected electrically as illustrated in Figure F-8, placing the new control between the basic control and the motor drive assembly. The control needs only sensory input of V_B.

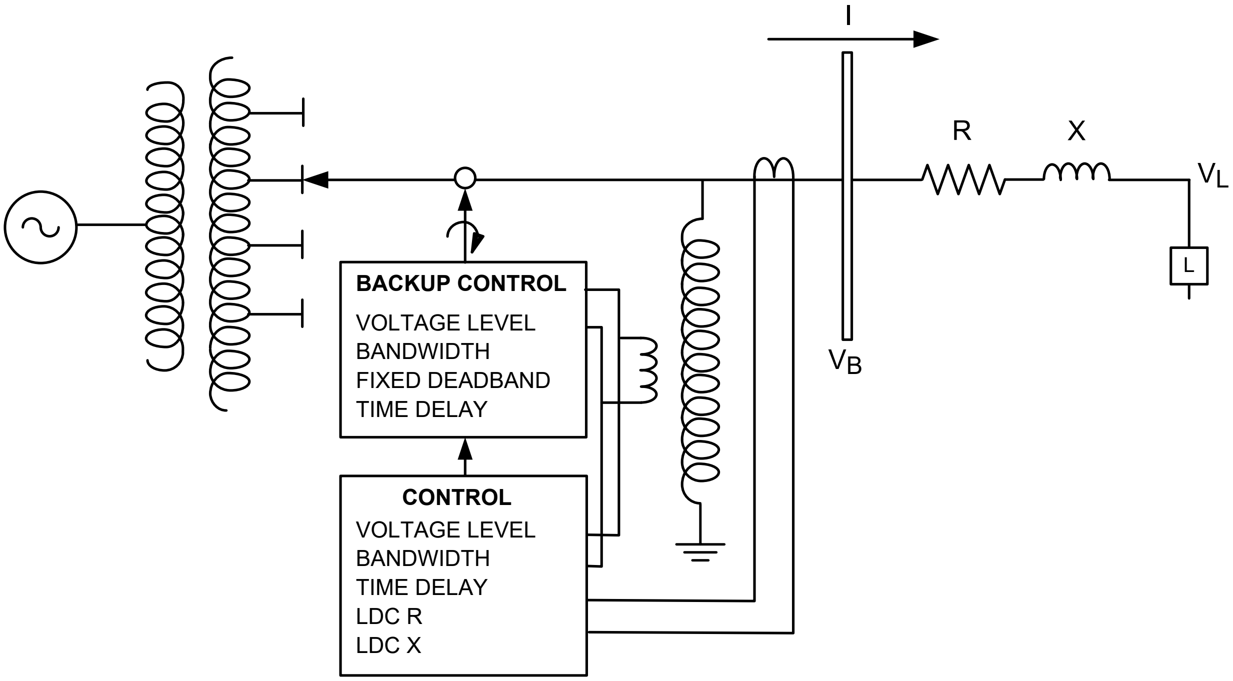

Figure F-8 LTC Control Circuit Including LTC Backup Control

The LTC Backup Control includes four setpoints:

1. **Voltage Level** – This is the desired mid-point which determines Backup Control action. If the desired output voltage range is 114 V to 126 V, which is typical, the Voltage Level will be set at 120 V.
2. **Bandwidth** – The bandwidth is the range in which the Backup Control is satisfied (no corrective action required). A bandwidth of 12 V (together with the 120 V bandcenter setting), means the control is "in-band" over the range of 114 V to 126 V. At 114 V, the control will take action to prevent a further lowering of the LTC tap position. At 126 V, the control will prevent any further raising of the LTC. In addition, at 126 V, the deadband comes into play.
3. **Deadband** – A deadband, effective above the upper band-edge, is the region in which no further raise commands will be allowed to the LTC, but also, no corrective action is taken to lower V_B. When the voltage does pass above the deadband, due to changes in the system source conditions, the Backup Control will command the LTC to lower or "run back" the voltage, without regard to the status of the main control. The deadband is not a user setpoint, it is factory specified as 1 V, 2 V, 3 V, or 4 V, with the 2 V setting the most common.
4. **Time Delay** – This setting applies to the run back aspect of the Backup Control. It will usually be set to a very short period of 0 to 10 seconds.

Figure F-9 illustrates the Voltage/Time relationships and actions for an LTC Backup Control, when used in a system application as defined by the three previous examples in the *"Bus Voltage Conditions When Using Line Drop Compensation"* section. Using the three examples, the LTC Backup Control settings are:

- Voltage Level = 120 V
- Bandwidth = 12 V = ±6 V
- Deadband = 2 V = 126 V to 128 V.

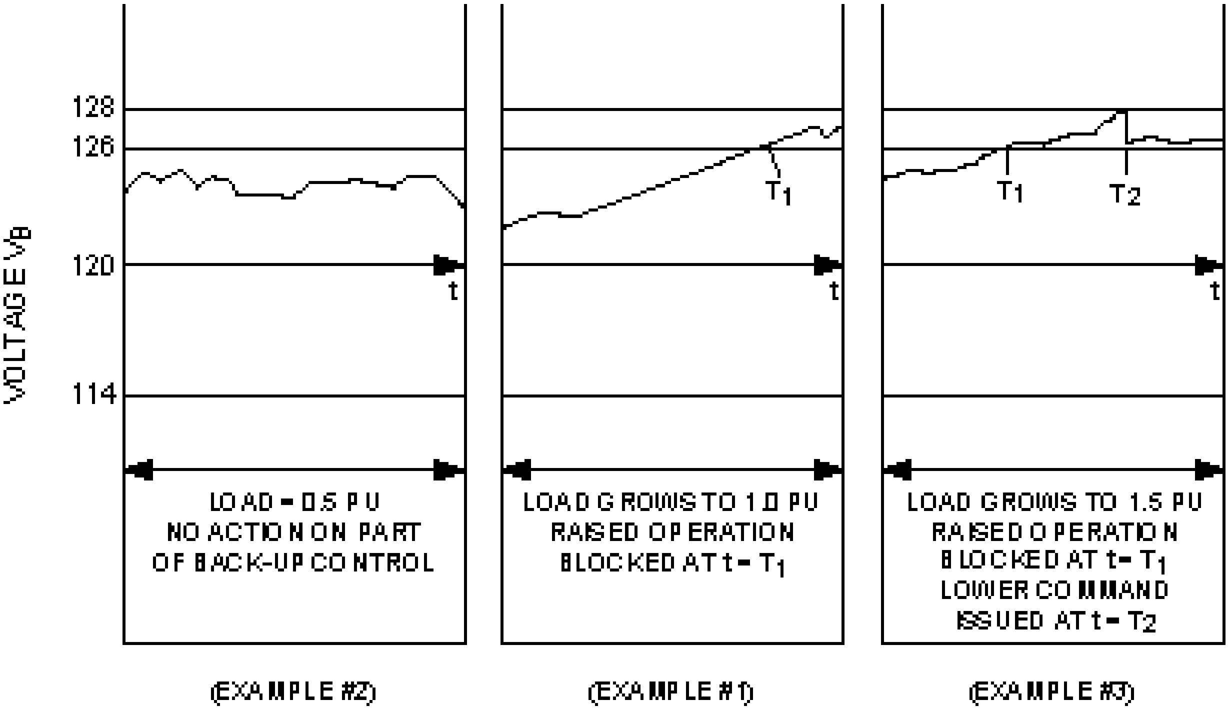

Figure F-9 Bus Voltage as Function of Load Current when Using Line Drop Compensation and the Action of LTC Backup Control

With a light load (Example #2), the voltage V_B stays in the region below 126 V. There is no action on the part of the Backup Control. As the load grows (Example #1), V_B rises due to LDC influence. At time T_1, V_B has attained 126 V, and the Backup Control blocks further raise commands to the LTC. If the voltage at V_B continues to rise to above 128 V, as shown at time T_2 (Example #3), the Backup Control will override the basic control and issue a lower tapchange command.

Control Settings when the Feeder Includes Capacitors

It is frequently the case that a distribution feeder will include power factor correction capacitors as well as step-voltage regulators. Often, it is incorrectly assumed that the use of these capacitors will necessitate the use of the negative X setting of Line Drop Compensation.

The basic problem is that the control at the transformer only has knowledge of voltage, current, and the relative phasing of the voltage and current. The control does not know if the load power factor is being altered by the use of capacitors. For example, presume that a capacitor bank has been installed on the load side of the transformer so that its rating exactly matches the VAr requirements of the load. The capacitor bank may have been installed at the load immediately at the transformer, or anywhere in between. The CT in the transformer cannot recognize the difference, however, the voltage drop on the feeder which is to be corrected using LDC, will be very different for each case.

Three possible conditions are illustrated in Figure F-10. In condition **(a)** all of the reactive current contributes to the line drop. In condition **(b)** the reactive current contributes to the drop in only one half of the line. In condition **(c)** there is no line drop due to reactive current, but the transformer CT upon which LDC must act, sees the same current in each case. The feeder voltage profile, based on the three conditions is illustrated in Figure F-11.

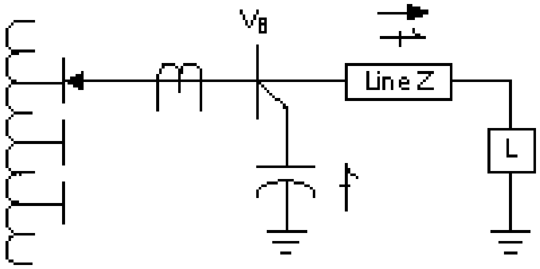

(a) Capacitors Near Source

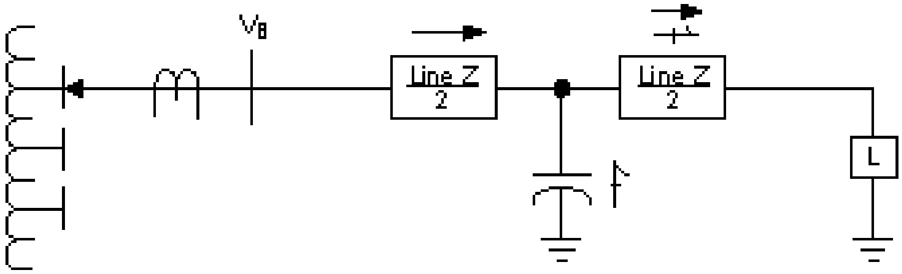

(b) Capacitors at the Midpoint

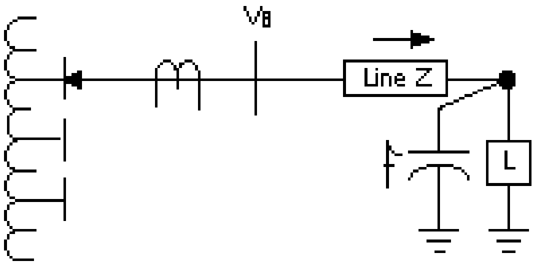

(c) Capacitors at Load

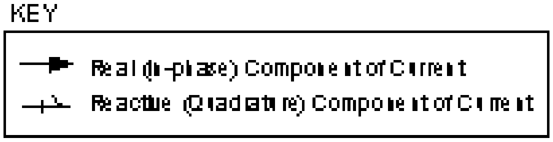

Figure F-10 Reactive Current Contribution to Line Drop as Function of Capacitor Placement

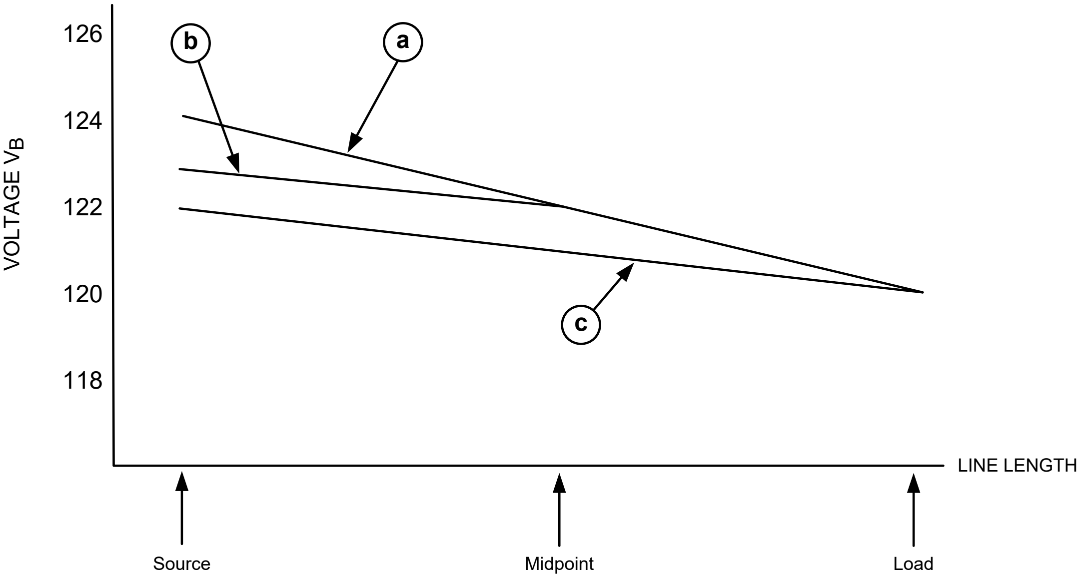

Figure F-11 Voltage Profile of Feeders for Three Possible Conditions

The conclusion is that LDC R and LDC X should be established based on the same premise as that originally described in "Setting LTC Control LDC R and LDC X", without regard to the presence of any capacitors on the line. The problem is that except for the case illustrated in condition **(c)**, the line drop will exceed that determined by the control LDC circuit or algorithm. When the capacitor is installed at any point other than at the load, the CT in the regulator does not "see" the reactive current, yet the reactive current does contribute to the line drop.

It should be recognized that the regulator output voltage must be higher (because of the additional line drop) than for the condition with the capacitors at the load. The following questions must be addressed: How to compensate? Should the LDC setting be increased? Should the regulator voltage bandcenter be increased?

First, it is apparent that the line drop due to the capacitor current is constant as long as the load requires the VArs made available by it. Accordingly, a constant voltage must be added at the regulator, which is independent of the sensed load current. It is necessary to set the regulator voltage bandcenter up, to adjust for the drop in the line caused by the reactive current. If there is 1200 kVAr connected at V_B, the drop in a line of four miles (similar to previous examples) not recognized by the LDC of the control, will be:

$$V_{\text{LINE DROP}} = \frac{1200\text{ kVAR}}{13.2\text{ kV}\sqrt{3}} 4(0.385 \div \text{j}.598$$

$$= 125.6 - \text{j}80.8\text{ V}$$

Of this, the quadrature component is inconsequential when added to the 7620 V base, so the increase in the voltage bandcenter will be:

$$\frac{125.6}{7620} = 1.6\%$$

This makes it necessary to establish a new voltage bandcenter setting 1.6% higher, or 122 V, in order to hold 120 V at the load when 1200 kVAr is connected near the regulator. Of course, this raises another question: what should be done when the capacitor is removed? Obviously, the voltage level setting should be reduced back to 120 V, and this may be accomplished by using a control voltage reduction capability actuated by a contact on the capacitor switch. However, note that this issue is reduced proportionately to the length of line involved, as the position of the capacitors is moved toward the load. It may also be necessary to increase the control bandwidth setting to ensure that the voltage change due to capacitor switching remains conservatively less than the bandwidth setting.

F.4 Regulators in Cascade Operation

In the case of longer feeders, several regulators may be included at intervals of several miles in order to keep the voltage profile as desired. This condition requires the addition of a Time Delay, in order to assure optimum operation.

Contrary to what may seem apparent at first, the time delay should increase as the distance from the source increases, in order to minimize total tapchange operations. In this way, the regulator closest to the source has the first opportunity to correct the voltage.

The time delays are usually staggered so that at least a 15 second time delay difference exists between sequential regulators in cascade.

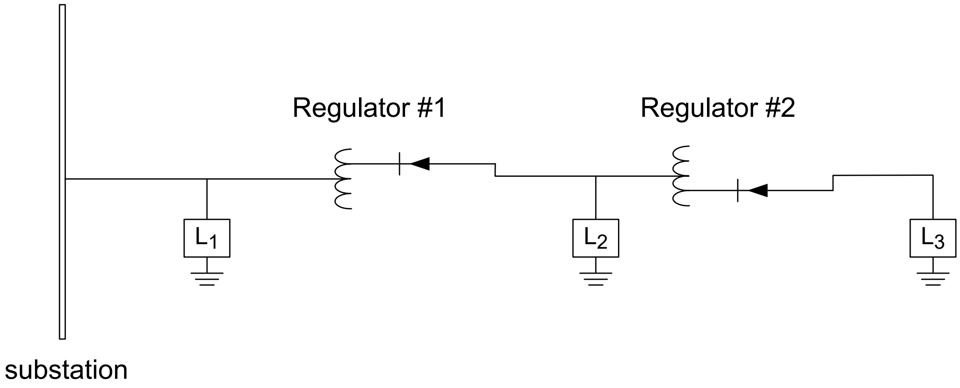

Figure F-12 Regulators in Cascade Operation

For example, consider the system illustrated in Figure F-12, where the time delay on Regulator #2 is set (incorrectly) to a value less than Regulator #1.

1. Presume a large load increase at L3 causes both regulator controls to sense an out-of-band low condition.
2. Regulator #2 makes step raise change(s), bringing its voltage in-band.
3. Subsequently, because of the longer time delay setting on the control on Regulator #1, it makes appropriate step raise change(s), bringing its voltage in-band.
4. The voltage at Regulator #2 may now be too large because of the action of Regulator #1. As a result, the control on Regulator #2 must again time-out, causing Regulator #2 to lower its tap.

The effect is that Regulator #2 does more tapchanging than desired. Properly setting Regulator #1 Time Delay shorter than that of Regulator #2, will correct that condition.

F.5 Reverse Power Flow Operation

Many regulators are equipped to recognize the reversal of power flow, and alter tapchanger action accordingly. Reverse Power Flow (RPF) operation in the classic sense, is applied to feeder regulators. Unfortunately, this approach has been improperly applied to systems with remote generation, in the mistaken belief that the classic solution will also work in this application.

Reverse Power Flow – Proper Application

The classic application for the use of Reverse Power Flow detection and actuation is based on the system illustrated in Figure F-13.

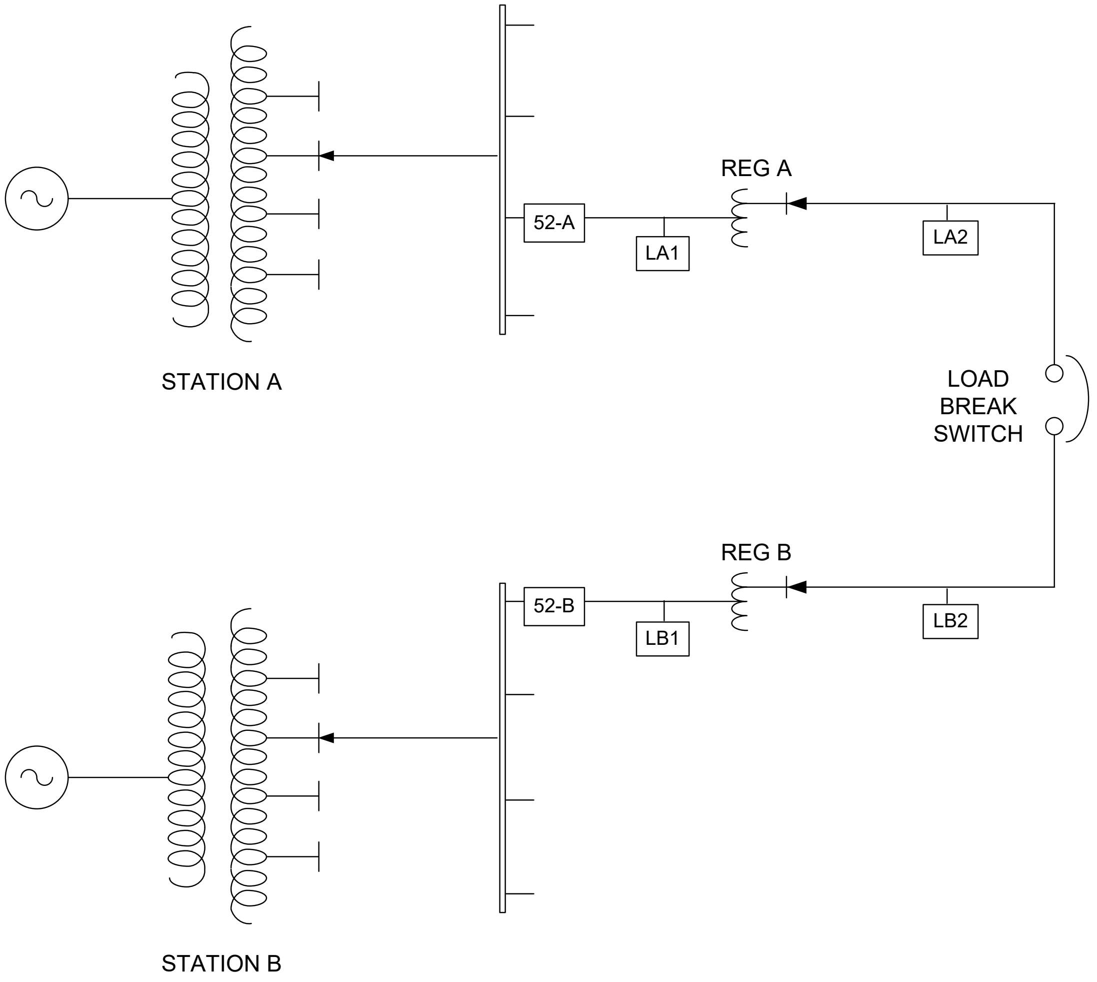

Figure F-13 System for Proper Application of Basic Reverse Power Flow Control

As illustrated in Figure F-13, Stations A and B are normally in service, and the load break switch is open. Therefore, loads LA1, LA2, LB1 and LB2 are all served radially from these respective stations.

Presume that Station B must be removed from service for maintenance. With two linemen able to communicate with each other, one lineman may close the load break switch, then radio to the other operator, who quickly (less than ≈30 sec.) opens breaker 52-B. All load service continues without interruption from Station A. However, note that the direction of the flow of load in Regulator B has reversed to serve LB1.

This reverse power operation is characterized by two very important points:

1. The transition was quick, accomplished in less time than that required for the control on Regulator B to have timed out.
2. At the completion of the switching, the system is again operating radially, though with Regulator B recognizing the power flow reversal.

In this case, Regulator B will be equipped to monitor the voltage on its new load side, having previously been the source. The regulator control must also reverse its operation, commanding the tapchanger "up" to lower the voltage and vice versa.

Reverse Power Flow – Improper Application

The previous Reverse Power Flow system diagram has been restructured in Figure F-14 to better illustrate the condition with sources of remote generation. The utility (Station A) serves load L1 and L2, with L2 on the load side of a regulator. A remote source of generation (Station B) is introduced, where B will have sufficient capacity to sell power to the utility. While the regulator will be forced into a Reverse Power Flow situation, a conventional RPF action is not appropriate. This becomes apparent by observing that upon normal RPF action, the regulator will attempt to use VT_1 and regulate per that signal. However, VT_1 is still connected to the utility source (Station A), and that source may be much stiffer than Station B. Consequently, the control senses an out-of-band condition and commands a tapchange. The voltage at VT_1 does not change appreciably, as it is held by Station A. Therefore, a second, third, fourth... tapchange is commanded, but without control satisfaction. Reaching the limit, the tapchanger runs to 16R or 16L (based on the initial out-of-band direction). The result is a drastic upset of the desired system VAr flows.

This application requires special consideration. For example, it may be that the objective of the LTC control is not to regulate voltage, but to act to minimize VAr exchange.

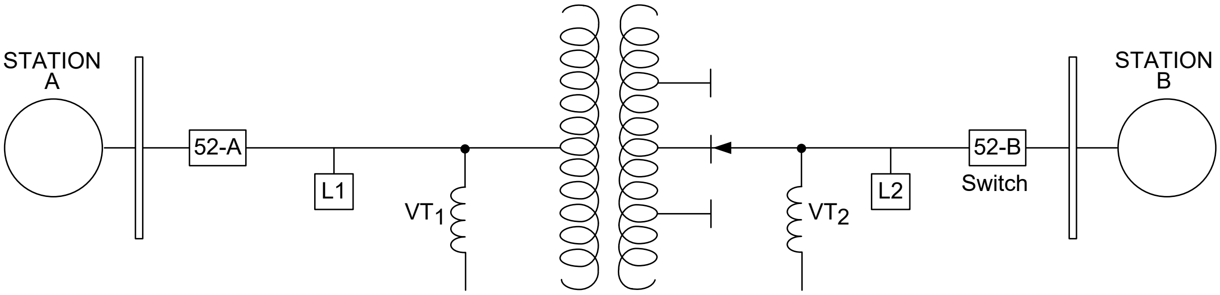

Figure F-14 System With Remote Source of Generation

This Page Left Intentionally Blank

Legal Information

Patent

The units described in this manual are covered by U.S. Patents, with other patents pending.

Buyer shall hold harmless and indemnify the Seller, its directors, officers, agents, and employees from any and all costs and expense, damage or loss, resulting from any alleged infringement of United States Letters Patent or rights accruing therefrom or trademarks, whether federal, state, or common law, arising from the Seller's compliance with Buyer's designs, specifications, or instructions.

Warranty

Seller hereby warrants that the goods which are the subject matter of this contract will be manufactured in a good workmanlike manner and all materials used herein will be new and reasonably suitable for the equipment. Seller warrants that if, during a period of five years from date of shipment of the equipment, the equipment rendered shall be found by the Buyer to be faulty or shall fail to perform in accordance with Seller's specifications of the product, Seller shall at his expense correct the same, provided, however, that Buyers shall ship the equipment prepaid to Seller's facility. The Seller's responsibility hereunder shall be limited to replacement value of the equipment furnished under this contract.

Seller makes no warranties expressed or implied other than those set out above. Seller specifically excludes the implied warranties of merchantability and fitness for a particular purpose. There are no warranties which extend beyond the description contained herein. In no event shall Seller be liable for consequential, exemplary, or punitive damages of whatever nature.

Any equipment returned for repair must be sent with transportation charges prepaid. The equipment must remain the property of the Buyer. The aforementioned warranties are void if the value of the unit is invoiced to the Seller at the time of return.

Indemnification

The Seller shall not be liable for any property damages whatsoever or for any loss or damage arising out of, connected with, or resulting from this contract, or from the performance or breach thereof, or from all services covered by or furnished under this contract.

In no event shall the Seller be liable for special, incidental, exemplary, or consequential damages, including but not limited to, loss of profits or revenue, loss of use of the equipment or any associated equipment, cost of capital, cost of purchased power, cost of substitute equipment, facilities or services, downtime costs, or claims or damages of customers or employees of the Buyer for such damages, regardless of whether said claim or damages is based on contract, warranty, tort including negligence, or otherwise.

Under no circumstances shall the Seller be liable for any personal injury whatsoever.

It is agreed that when the equipment furnished hereunder are to be used or performed in connection with any nuclear installation, facility, or activity, Seller shall have no liability for any nuclear damage, personal injury, property damage, or nuclear contamination to any property located at or near the site of the nuclear facility. Buyer agrees to indemnify and hold harmless the Seller against any and all liability associated therewith whatsoever whether based on contract, tort, or otherwise. Nuclear installation or facility means any nuclear reactor and includes the site on which any of the foregoing is located, all operations conducted on such site, and all premises used for such operations.

Notice:

Any illustrations and descriptions by Beckwith Electric are for the sole purpose of identification.

The drawings and/or specifications enclosed herein are the proprietary property of Beckwith Electric, and are issued in strict confidence; therefore, shall not be used as a basis of reproduction of the apparatus described therein without written permission of Beckwith Electric.

No illustration or description contained herein shall be construed as an express warranty of affirmation, promise, description, or sample, and any and all such express warranties are specifically excluded nor shall such illustration or description imply a warranty that the product is merchantable or fit for a particular purpose. There shall be no warranties which extend beyond those contained in the Beckwith Electric terms of sale.

All rights reserved by Beckwith Electric. No reproduction may be made without prior written approval of the Company.

This Page Left Intentionally Blank

BECKWITH ELECTRIC
6190 118th Avenue North • Largo, Florida 33773-3724 U.S.A.
PHONE (727) 544-2326
beckwithelectricsupport@hubbell.com
www.beckwithelectric.com
ISO 9001:2015

© 2019 Beckwith Electric. All Rights Reserved.