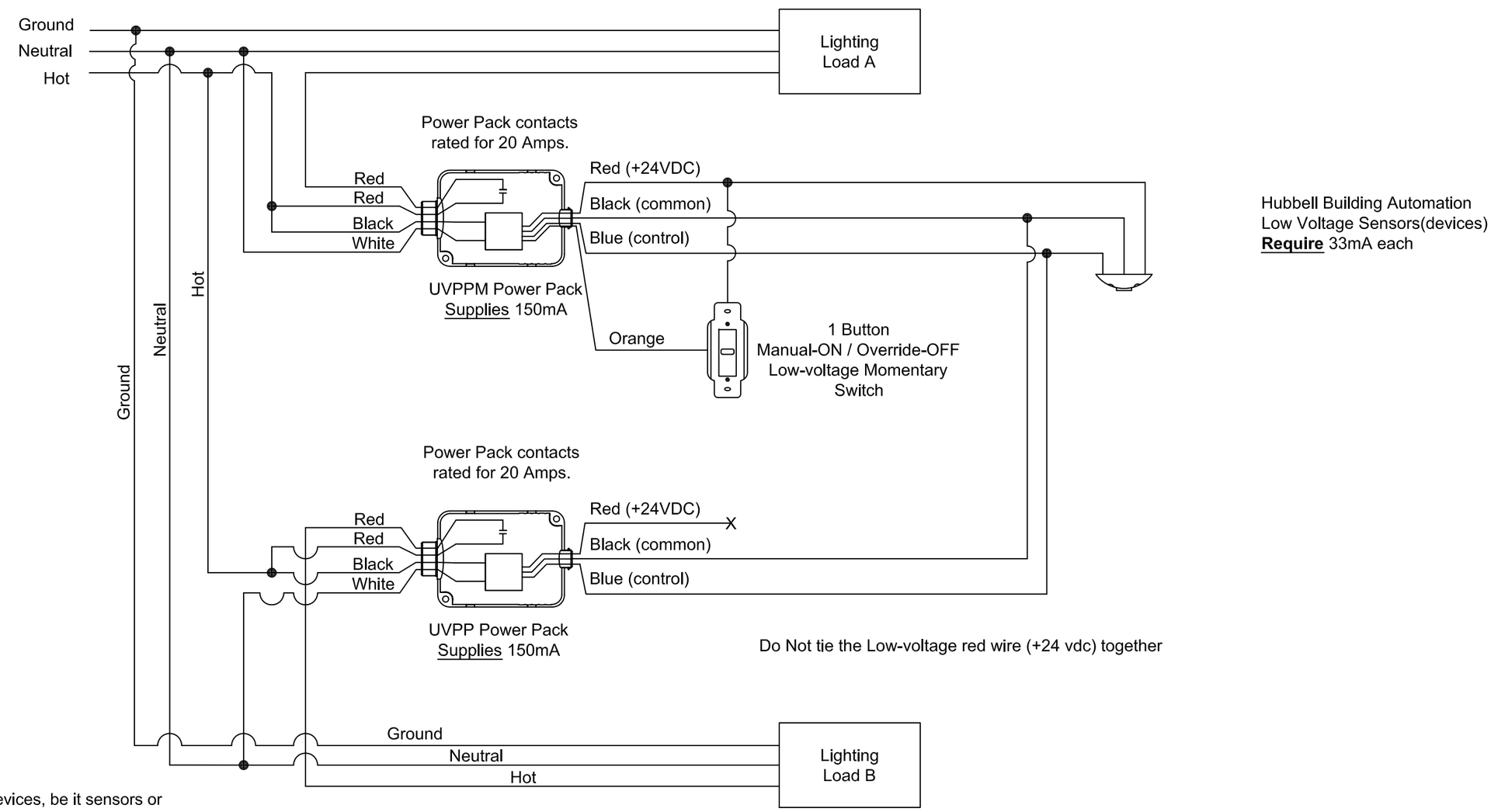

NOTES:

1. DO NOT attempt to power more than 4 devices, be it sensors or slave packs, from a single power pack.
2. Load A is Manual ON/Auto OFF. Load B is Auto ON/OFF.
3. The recommended low voltage wire is 18-22AWG.

HUBBELL®
Building Automation

(888) 698-3242
(512) 450-1100

9601 Dessau Rd. - Bldg 1
Austin, Tx 78745

AB switching with 1 sensor, 1 UVPPM and 1 UVPP

THIS DOCUMENT AND SPECIFICATIONS DESCRIBED WITHIN ARE THE EXCLUSIVE PROPERTY OF HUBBELL BUILDING AUTOMATION ISSUED IN THE STRICTEST CONFIDENCE, AND SHALL NOT BE REPRODUCED, COPIED OR USED WITHOUT PRIOR WRITTEN PERMISSION.