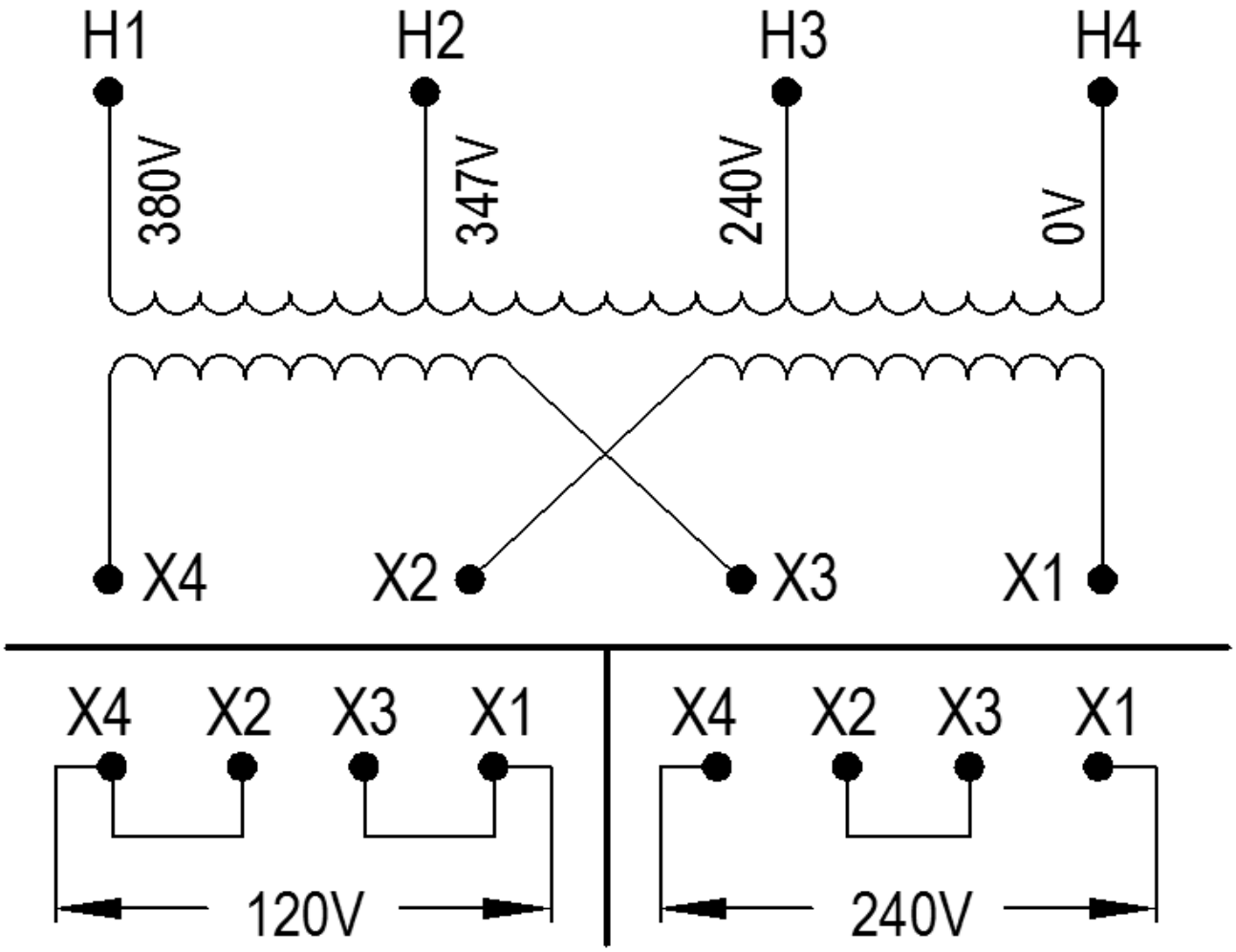
H1
H2
H3
H4
380V
347V
240V
0V
X4
X2
X3
X1
X4
X2
X3
X1
120V
X4
X2
X3
X1
240V