| TRANSFORMER SPECIFICATIONS | |
|---|---|
| PRIMARY VOLTAGE(S) | 208/277 |
| SECONDARY VOLTAGE(S) | 120 |
| RATED V.A. | 100 |
| RATED FREQUENCY | 50 / 60 |
| INSULATION CLASS | 130°C @ MAX. RISE 55°C |
| AGENCY APPROVALS | UL, CUL |
| ESTIMATED WEIGHT | 4.2 LBS |

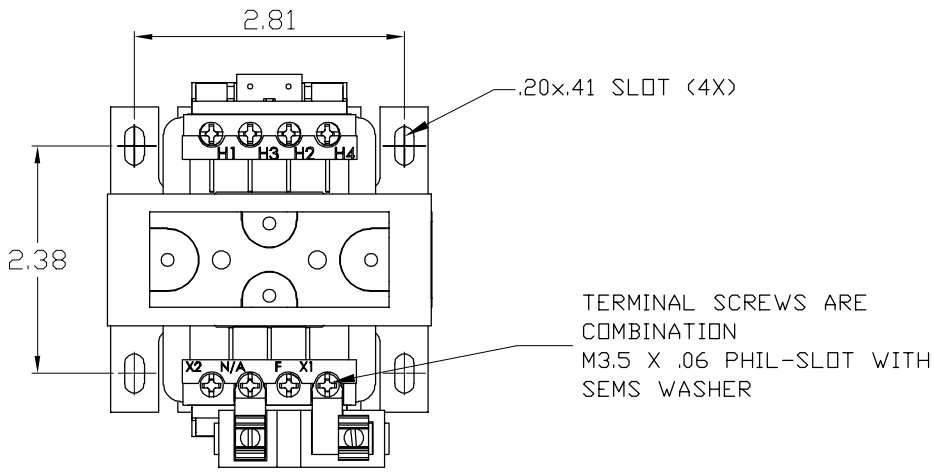


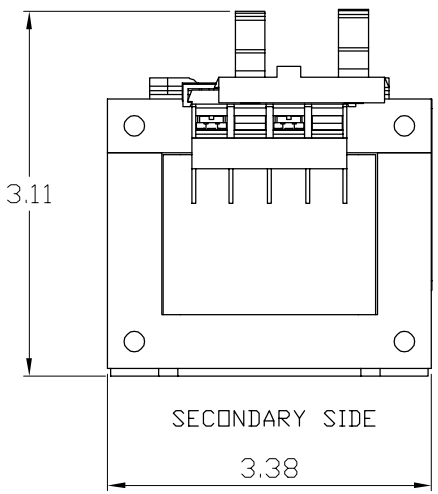


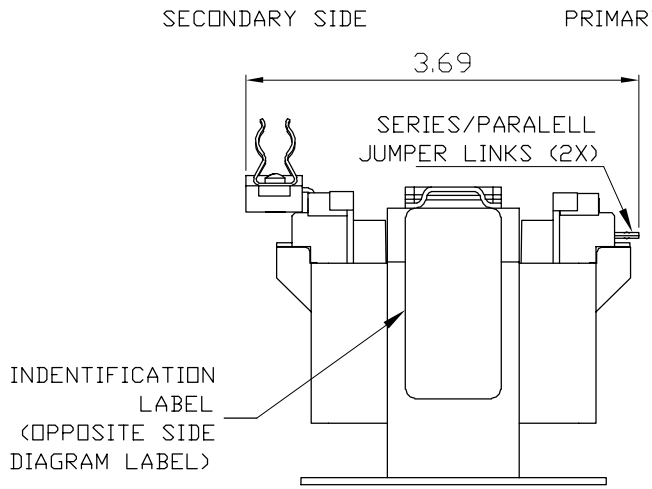


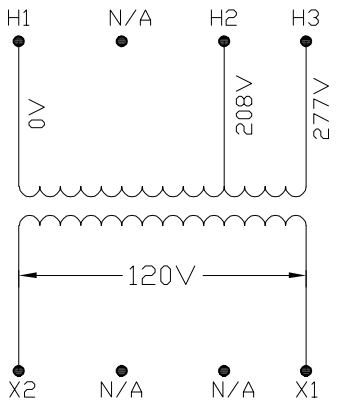


CONNECTION DIAGRAM

| | | NAME | DATE |
|---|---|---|---|
| DIMENSIONS ARE IN INCHES<br>TOLERANCES:<br>.XX ± .03<br>.XXX ± .010<br>ANGULAR: ± 1° | DRAWN BY: | VS | 05/08/2020 |
| | CHECKED BY: | | |

SOURCE N/A

MATERIAL N/A

FINISH N/A

DO NOT SCALE DRAWING

PROPRIETARY AND CONFIDENTIAL

THE INFORMATION CONTAINED IN THIS DRAWING IS THE SOLE PROPERTY OF ACME. ANY REPRODUCTION IN PART OR AS A WHOLE WITHOUT THE WRITTEN PERMISSION OF ACME IS PROHIBITED.

Acme Electric®

DESCRIPTION: 100 VA

SIZE A

DWG. NO. TB100N006F0